Two-Way Ball Valves

Multi-Way Ball Valves

Flow Control and Check Valves

Gauge Isolator Valves

Catalogue 6

STAUFF Valves

Germany

Walter Stauffenberg GmbH & Co. KG
Im Ehrenfeld 4
58791 Werdohl

www.stauff.com

STAUFF products and services are globally available through wholly-owned subsidiaries and a tight network of authorised distributors and representatives in all major industrial regions of the world.

You can find detailed contact information on the last two pages of this product catalogue or at www.stauff.com/contact.

Please note: Unless otherwise stated, all data and figures in this product catalogue are approximate values and are only valid as references, which are not binding (also in respect to any third parties' rights of protection) and thus do not release the customer / user from checking and testing the suitability of the products for the foreseen purposes. Therefore, data and figures can only be used in a limited sense for construction purposes.

The application of the products is beyond the control possibilities of the manufacturer and, therefore, is exclusively subject to the responsibility of the customer / user.

In the event that a liability is nevertheless considered, any compensation will be limited to the value of the goods supplied by the manufacturer and used by the customer / user. As a matter of course, the manufacturer guarantees the perfect quality of all products in accordance with the General Terms and Conditions of Business and Sale.

Subject to modifications due to the ongoing development and improvement of the products.

With the publication of this product catalogue, previous editions are no longer valid.

Introduction	**4 - 11**	
Two-Way Ball Valves	**12 - 49**	**A**
Multi-Way Ball Valves	**50 - 89**	**B**
Flow Control Valves	**90 - 101**	**C**
Gauge Isolator Valves	**102 - 105**	**D**
Special Application Valves	**106 - 111**	**E**
Spare Parts / Accessories / Options	**112 - 121**	**F**
Technical Appendix	**122 - 133**	**G**
Appendix (Product-Specific Abbreviations / Global Contact Directory)	**134 - 139**	

Catalogue 1
STAUFF Clamps

- Block Clamps
- Special Clamps
- Light Series Clamps
- Saddle Clamps
- U-Bolt Clamps
- Metal Clamps
- Construction Series

Catalogue 2
STAUFF Connect

- Tube Connectors
- Assembly Tools and Devices

Catalogue 3
STAUFF Flanges

- SAE Flanges
- Gear Pump Flanges

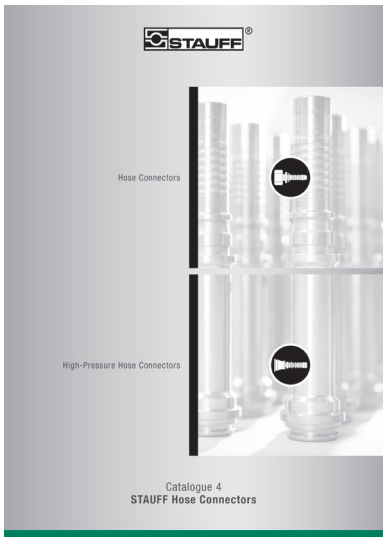

Catalogue 4
STAUFF Hose Connectors

- Hose Connectors
- High-Pressure Hose Connectors

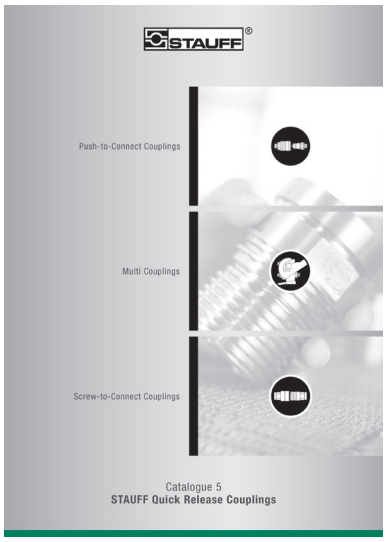

Catalogue 5
STAUFF Quick Release Couplings

- Push-to-Connect Couplings
- Multi Couplings
- Screw-to-Connect Couplings

Catalogue 6
STAUFF Valves

- Two-Way Ball Valves
- Multi-Way Ball Valves
- Flow Control and Check Valves
- Gauge Isolator Valves

Catalogue 7
STAUFF Test

- Test Couplings
- Test Adaptors
- Test Hoses and Connectors

Catalogue 8
STAUFF Diagtronics

- Pressure Gauges
- Hydraulic Testers
- Oil Analysis Equipment

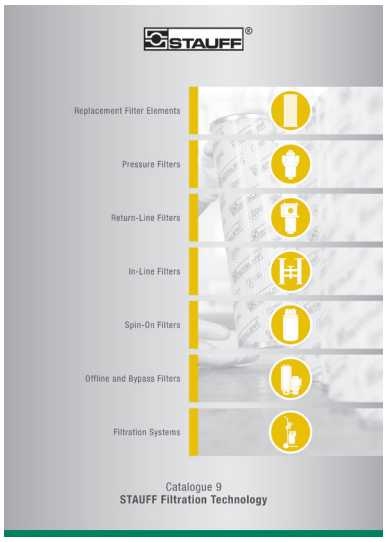

Catalogue 9
STAUFF Filtration Technology

- Replacement Filter Elements
- Pressure Filters
- Return-Line Filters
- In-Line Filters
- Spin-On Filters
- Offline and Bypass Filters
- Filtration Systems

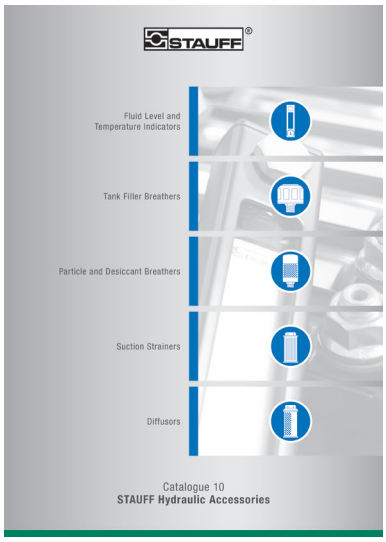

Catalogue 10
STAUFF Hydraulic Accessories

- Fluid Level and Temperature Indicators
- Tank Filler Breathers
- Giant and Desiccant Air Breathers
- Suction Strainers
- Diffusors

For more than 50 years, the companies of STAUFF Group have been developing, manufacturing and distributing pipework equipment and hydraulic components for mechanical and plant engineering and for service and industrial maintenance.

In addition to mobile and industrial hydraulic machinery, typical applications also include commercial and special purpose vehicles, rail transportation and energy technology. Likewise, STAUFF products are used in marine, oil and gas applications and in the process, food and chemical industries.

The overall range currently includes about 50000 standard products as well as numerous special and system solutions according to customer's specifications or based on our in-house development.

All STAUFF products undergo relevant testing in accordance with international regulations and are governed by the high standards of the in-house quality management system. Furthermore, many items have received certifications and approvals from various international institutes, organisations and authorities who have independently confirmed the quality and performance of the products.

Wholly-owned manufacturing, sales and service facilities in 18 countries and a tight global network of authorised distribution partners ensure high presence and service paired with a maximum of availability.

Lloyd's Register LRQA

Quality Management – ISO 9001:2015
Environmental Management – ISO 14001:2015
Safety Management – ISO 45001:2018
Energy Management – ISO 50001:2018

STAUFF LINE Components

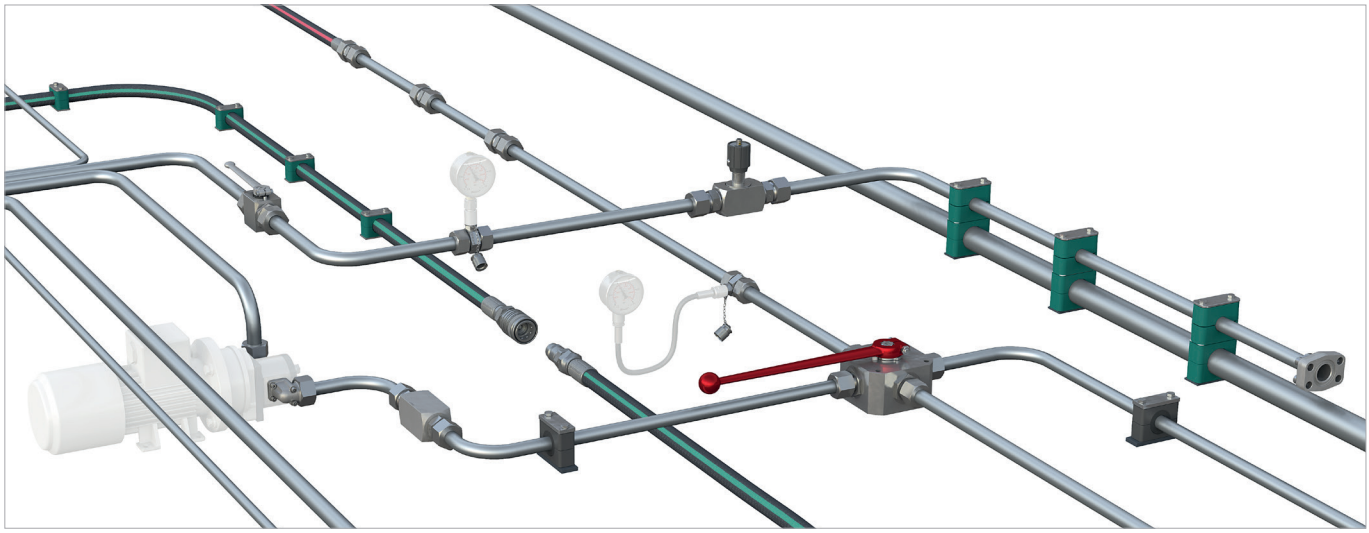

With the seven dedicated **STAUFF Line** product groups

- **STAUFF Clamps**
- **STAUFF Connect**
- **STAUFF Flanges**
- **STAUFF Hose Connectors**
- **STAUFF Quick Release Couplings**
- **STAUFF Valves**
- **STAUFF Test**

from own, in-house development and manufacturing, the companies of the STAUFF Group provide a comprehensive range of components for fastening and connecting pipes, tubes and hoses for mobile and industrial hydraulic applications and many other industries.

The portfolio is completed by components for shutting-off, regulating, throttling and measuring fluid media.

In order to perfectly match each other, STAUFF Line products are designed and offered on a high, uniform level of quality. A large proportion of the range made from steel comes as standard with the premium STAUFF Zinc/Nickel surface coating, which is also optionally available for many of the other components.

This coating offers the most reliable surface protection far beyond the previous market standards – even after transport, handling and assembly of the components – and meets all current legal requirements.

If desired, Original Equipment Manufacturers can be supported with value-added services, from **technical consultation** to **pre-assembly, assembly and kitting** as well as **logistics services**:

- Support with the **selection of suitable standard components** and ordering options; provision of **customised solutions** according to customer's specifications or based on our in-house development – from prototyping to large scale production

- **Analysis and optimization** of existing and design and developments of new systems aimed at increasing the efficiency and performance of machines and equipment and creating value for customers by reducing the total cost

- **Pre-assembly, assembly and kitting** of individual components to customer-specific system modules

- Individually coordinated **procurement solutions** (e.g. web shop and electronic data interchange) and **supply models** (e.g. from warehousing of customised components to Kanban logistics and just-in-time delivery of pre-fabricated system modules to the assembly lines of the customers) aimed at optimising material flows

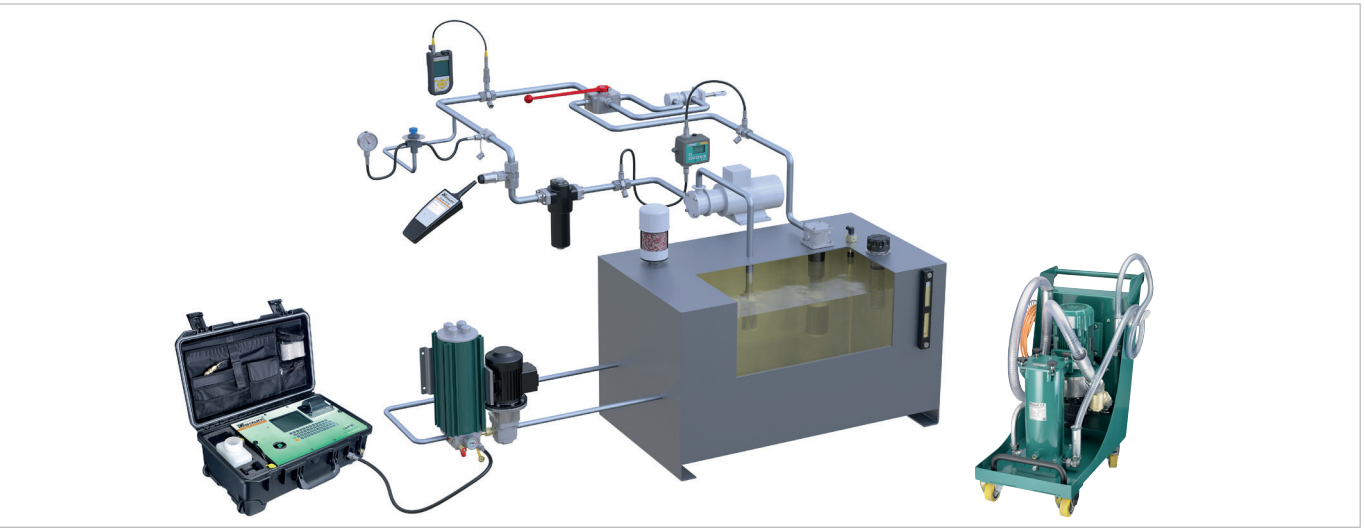

Aligned with the needs of the market, the product groups

- **STAUFF Test**
- **STAUFF Diagtronics**
- **STAUFF Filtration Technology**
- **STAUFF Hydraulic Accessories**

include a comprehensive range of analogue and digital measuring equipment and devices, filtration systems and replacement filter elements as well as accessories for the construction of tanks, reservoirs, power packs and gear boxes in mobile and industrial hydraulics.

The offer is completed by relevant value-added services:

- Support with the **selection of suitable components** and ordering options; provision of **customised solutions** according to customer's specifications or based on our in-house development – from prototyping to large scale production

- Analysis of existing hydraulic circuits aimed at filtration systems, tank components and monitoring devices that perfectly match to the specific requirements, and developing integrated concepts to increase the efficiency and performance of machines and equipment

- Individually coordinated **procurement solutions** and **supply models**

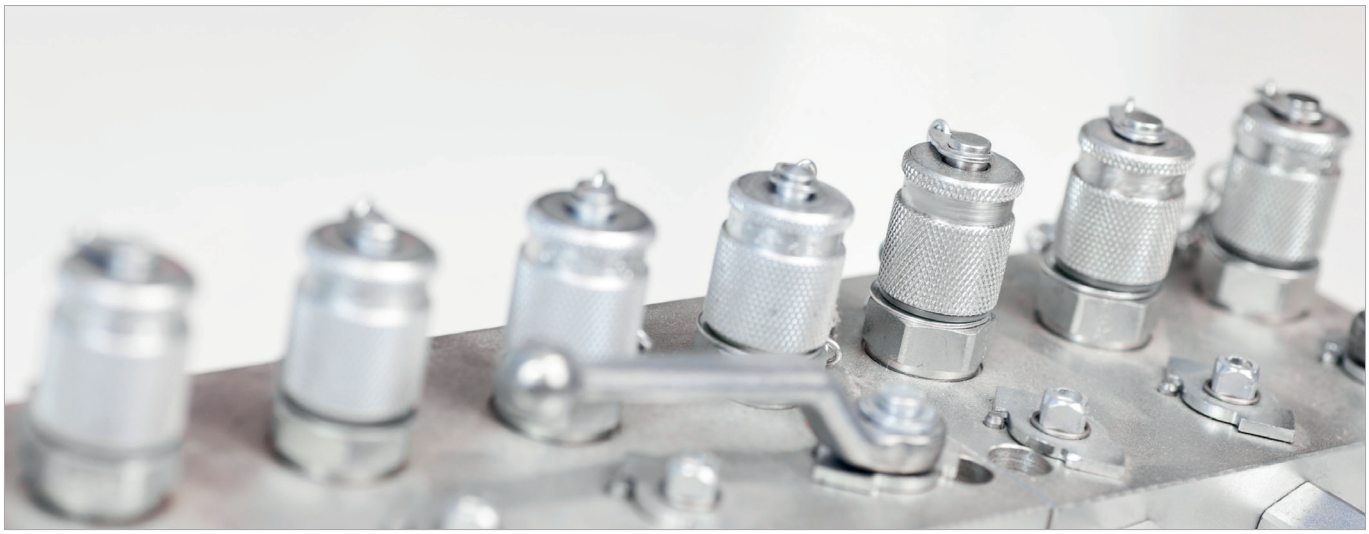

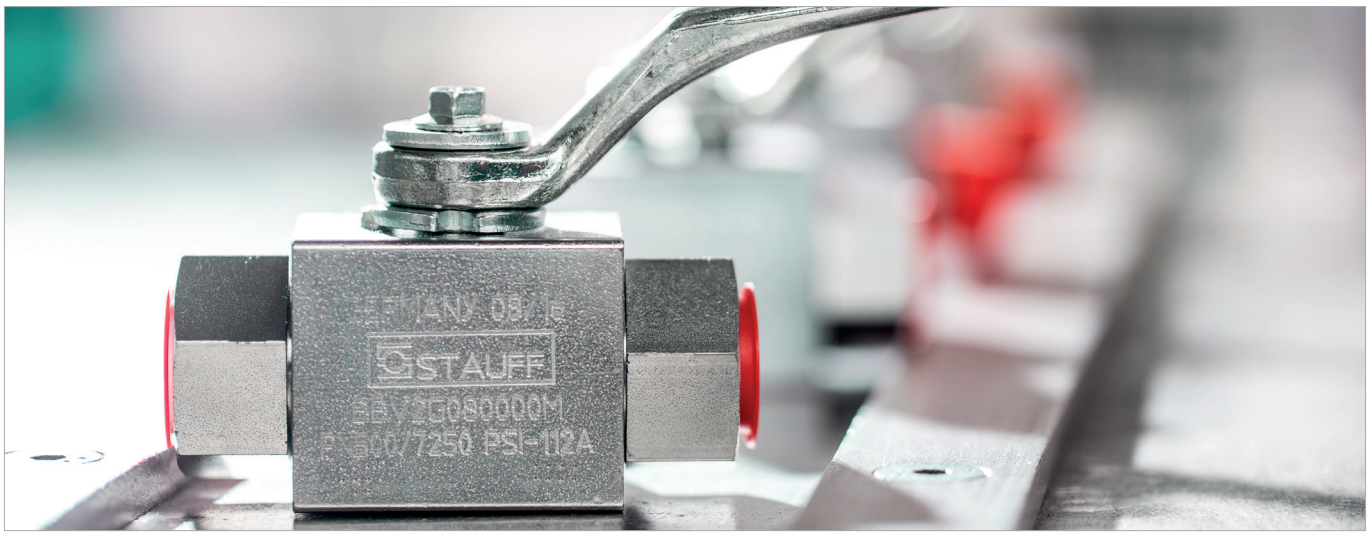

STAUFF Valves

With the STAUFF Valves product range, the companies of STAUFF Group provide access to a comprehensive range of manually operated valves for shutting off, regulating, throttling and fluid media in mobile and industrial hydraulics.

The portfolio includes two-way, three-way and four-way ball valves of various designs and sizes made of steel or stainless steel for medium and high pressure applications.

The product range in completed by flow control valves (such as throttle valves and check valves) for in-line assembly, manifold mounting and cartridge assembly, as well as single-station and multi-station gauge isolator valves.

For special applications, STAUFF is able to provide technically modified products that will, for example, cover extreme pressure ranges up to 800 bar /12000 PSI and temperatures up to +500°C / +930°F.

For these and other customised solutions according to customer's specifications or based on our in-house development, STAUFF guarantees prompt service.

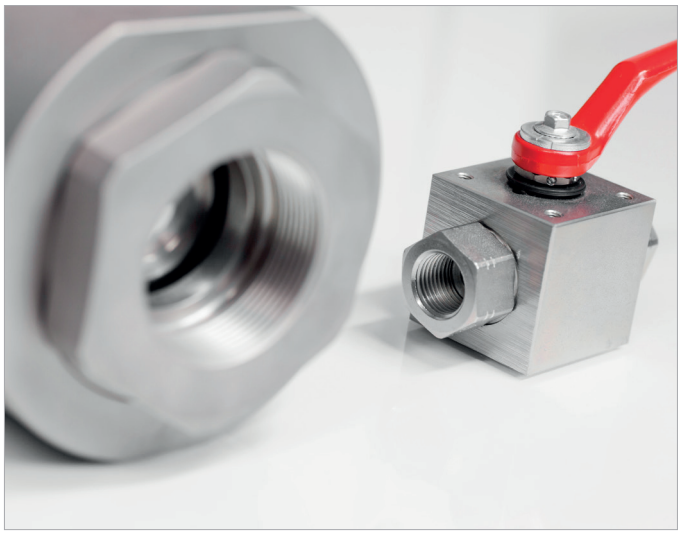

Design Features of STAUFF Valves

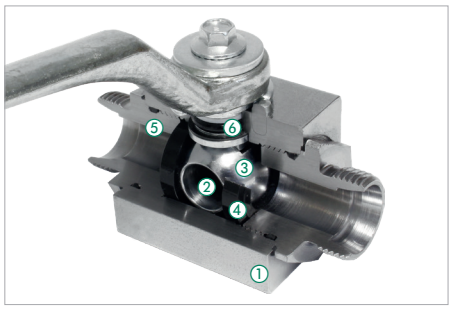

1. Ball valve body made of European quality steel with the option of full material identification and retraceability
2. Ball with a full bore with no cross-section restriction in the ball valve
3. Hard chrome-plated balls to reduce friction and seat wear
4. Ball seats made of Delrin® (POM) to assure low operating torques
5. No exposed threads in the flow passage
6. High-quality design with a large thrust washer (strength of 1mm) and back-up ring to protect the o-ring against extrusion

Gradual changeover of the standard surface coating of selected series from "Carbon Steel, zinc/iron-plated" to "Carbon Steel, zinc/nickel-plated"

www.stauff.com/catalogues

The STAUFF online catalogue centre at www.stauff.com/catalougues provides fast and direct access to digital versions of this as well as other STAUFF product catalogues in all available languages.

Online Page-Flip Catalogues

- Easy navigation through index or the powerful full text search functionality
- Contents can be shared and forwarded by e-mail, printed or downloaded and saved in PDF file format
- Also suitable for mobile devices

Download Catalogues

- Download entire product catalogues and save them in PDF file format

The fastest way to the online page-flip catalogue:

The links that can be found at the bottom edge of all pages of this product catalogue will lead you directly to the corresponding page in the online page-flip catalogue.

In doing so, contents can be searched, shared and forwarded by e-mail, printed or downloaded and saved in PDF file format.

Scan the QR code next to the direct link with the camera of your mobile device* and also use the functions in this way.

* may require a suitable app

10 Catalogue 6 • Edition 06/2024 www.stauff.com/6/en/#10

www.stauff.com

With the STAUFF Digital Platform available at www.stauff.com, commercial customers and users of STAUFF products can not only inform themselves in all detail about the 50000 components typically available from stock, but also directly purchase these online without complex registration.

General information about the companies of STAUFF Group, latest business and product news as well as complete global contact details also be available.

Main Functionalities of the STAUFF Digital Platform:

Around the clock
Check stock availability and pricing for STAUFF products in real time

Cross references
Search by article designations of other manufacturers / suppliers

Live chat
Get directly in touch with the STAUFF customer service and sales team

CAD database
Download 3D models and 2D drawings for STAUFF products

Advantages as a Registered User of the STAUFF Digital Platform:

Purchase STAUFF products
Taking customer-specific pricing and delivery conditions into account

Ordering w/o searching
Quick ordering by entering article number, quantity and requested delivery date

File upload
Direct upload of orders with multiple positions in CSV or Excel file format

Notepad function
Create project lists to save interesting products for later

www.stauff.com/cad

Immediate access to and free download of 3D models and 2D drawings for a growing number of STAUFF products

www.filterinterchange.com

Online database for the quick and easy identification and interchange of almost all common brands and types of replacement filter elements

Follow STAUFF and keep yourself updated:

Linkedin
www.linkedin.com/company/stauff

Youtube
www.youtube.com/stauffgroup

STAUFF Newsletters
Automatic e-mail notifications about latest news from STAUFF
www.stauff.com/newsletter

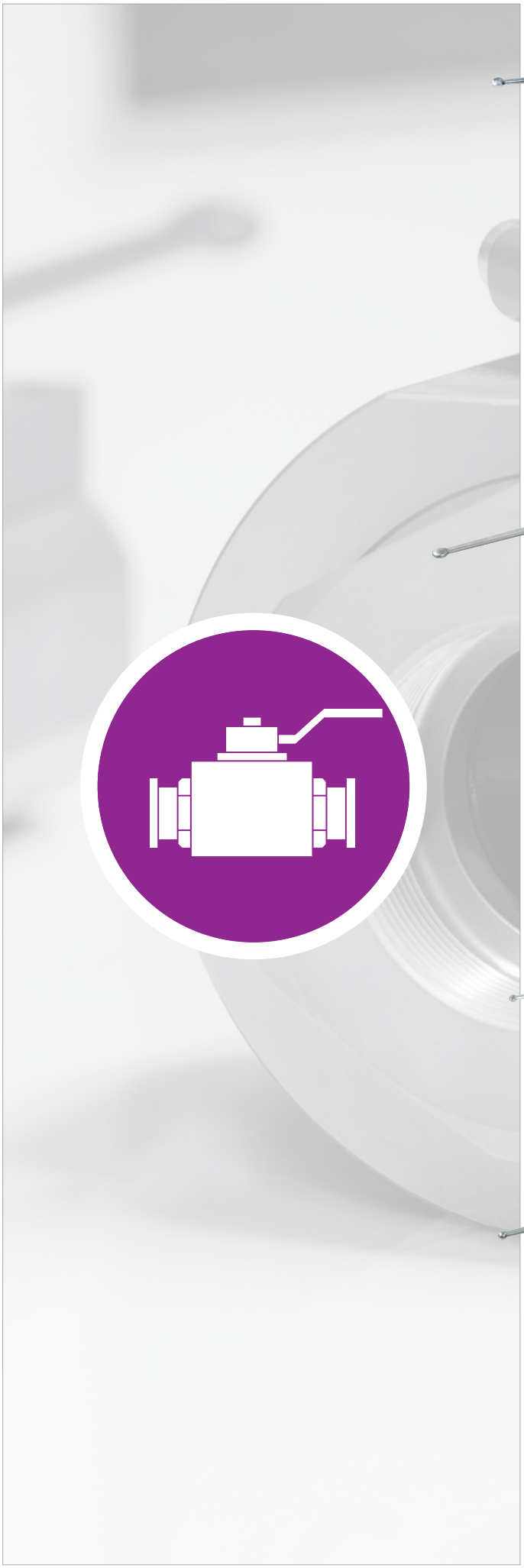

High-Pressure Block Body Ball Valve BBV-2		**14 - 17**
BBV-2-G	Female BSP Thread	**15**
BBV-2-N	Female NPT Thread	**15**
BBV-2-U	Female UN/UNF Thread	**16**
BBV-2-ORFS	O-Ring Face Seal Connection	**16**
BBV-2-L/S	24° Cone Connection	**17**

High-Pressure Forged Body Ball Valve FBV-2		**18-21**
FBV-2-G	Female BSP Thread	**19**
FBV-2-N	Female NPT Thread	**19**
FBV-2-U	Female UN/UNF Thread	**20**
FBV-2-ORFS	O-Ring Face Seal Connection	**20**
FBV-2-L/S	24° Cone Connection	**21**

High-Pressure 800 bar / 12000 PSI Block Body Ball Valve HBV-2		**22-23**
HBV-2-N	Female BSP Thread	**23**
HBV-2-S	24° Cone Connection	**23**

High-Pressure Block Body Ball Valve BBV-2-F		**24-25**
BBV-2-F3	SAE Split Flange Connection 3000 PSI Series (ISO 6162-1)	**25**
BBV-2-F6	SAE Split Flange Connection 6000 PSI Series (ISO 6162-2)	**25**

A

High-Pressure Forged Body Ball Valve FBV-2-F		**26-27**
FBV-2-F3	SAE Split Flange Connection 3000 PSI Series (ISO 6162-1)	**27**
FBV-2-F6	SAE Split Flange Connection 6000 PSI Series (ISO 6162-2)	**27**

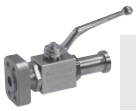

High-Pressure Block Body Ball Valve BBV-2-F/C		**28-29**
BBV-2-F/C3	SAE Split / Mating Flange Connection 3000 PSI Series (ISO 6162-1)	**29**
BBV-2-F/C6	SAE Split / Mating Flange Connection 6000 PSI Series (ISO 6162-2)	**29**

High-Pressure Forged Body Ball Valve FBV-2-F/C		**30-31**
FBV-2-F/C3	SAE Split / Mating Flange Connection 3000 PSI Series (ISO 6162-1)	**31**
FBV-2-F/C6	SAE Split / Mating Flange Connection 6000 PSI Series (ISO 6162-2)	**31**

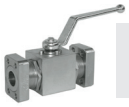

High-Pressure Block Body Ball Valve BBV-2-C		**32-33**
BBV-2-C3	SAE Flange Connection 3000 PSI Series (ISO 6162-1)	**33**
BBV-2-C6	SAE Flange Connection 6000 PSI Series (ISO 6162-2)	**33**

High-Pressure Forged Body Ball Valve FBV-2-C		**34-35**
FBV-2-C3	SAE Flange Connection 3000 PSI Series (ISO 6162-1)	**35**
FBV-2-C6	SAE Flange Connection 6000 PSI Series (ISO 6162-2)	**35**

High-Pressure Round Body Ball Valve BV-2-C		**36-37**
BV-2-C3/6	SAE Flange Connection 3000/6000 PSI Series (ISO 6162-1/2) - Dual Pattern	**37**

High-Pressure Round Body Ball Valve BV-2-C		**38-39**
BV-2-C3	SAE Flange Connection 3000 PSI Series (ISO 6162-1) - Single Pattern	**39**
BV-2-C6	SAE Flange Connection 6000 PSI Series (ISO 6162-2) - Single Pattern	**39**

High-Pressure Round Body Ball Valve BV-2-ISO		**40-41**
BV-2-ISO2	ISO Flange Connection 250 bar / 3600 PSI Series (ISO 6164)	**41**
BV-2-ISO4	ISO Flange Connection 400 bar / 5800 PSI Series (ISO 6164)	**41**
BV-2-ISO3	ISO Flange Connection 350 bar / 5000 PSI Series (not part of ISO 6164)	**41**

High-Pressure Round Body Ball Valve BV-2-CET		**42-43**
BV-2-CET2	CETOP Flange Connection 250 bar / 3600 PSI Series (CETOP RP 63 H)	**43**
BV-2-CET4	CETOP Flange Connection 400 bar / 5800 PSI Series (CETOP RP 63 H)	**43**

High-Pressure Block Body Ball Valve KHZ-2-C		**44-46**
KHZ-2-C3	SAE Flange Connection 3000 PSI Series (ISO 6162-1)	**45**
KHZ-2-C6	SAE Flange Connection 6000 PSI Series (ISO 6162-2)	**46**

High-Pressure Block Body Ball Valve for Manifold Mounting MBBV-2		**48-49**

A

High-Pressure Block Body Ball Valve ▪ Type BBV-2

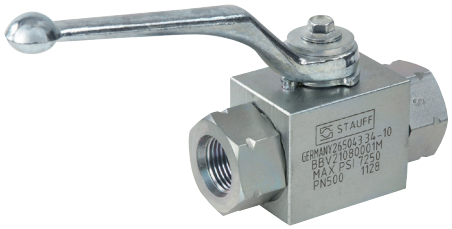

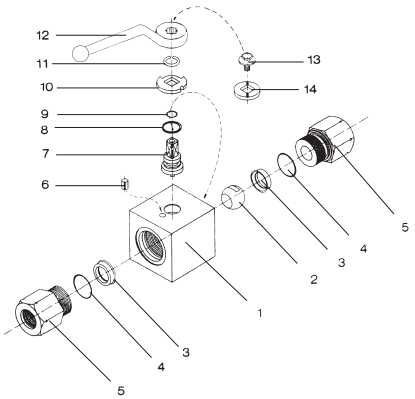

List of Components

No.	Qty.	Description
1	1	Housing
2	1	Ball
3*	2	Seat
4*	2	Connector O-Ring
5	2	Connector
6	1	Stop Pin
7	1	Stem
8*	1	Thrust Ring
9*	1	Stem O-Ring
10	1	Cam Plate
11	1	Snap Ring
12	1	Lever
13	1	Stem Screw
14	1	Flow Indicator

Characteristics

Two-way high-pressure block body ball valves designed for use as on/off devices for hydraulic applications

Standard Construction
- Block body design for in-line assembly
- Supplied with off-set lever

Standard Materials
- Body: Carbon Steel, zinc/iron-plated
- Ball: Carbon Steel, hard chrome-plated
- Stem: Carbon Steel
- Lever: Zinc (STAUFF Sizes 02 to 08)
  Aluminium (STAUFF Size 10)
  Carbon Steel (STAUFF Sizes 12 to 24R)
- Ball seat: Delrin® (POM)
- O-rings: FKM (Viton®)

Standard Connections Styles / Sizes
- Female BSP thread (DIN ISO 228) >G 1-1/2 BSP
- Female NPT thread (ANSI B1.20.1) >1-1/2–11-1/2 NPT
- Female UN/UNF thread (SAE J 514) >1-7/8–12 UN (1-1/2" SAE)
- Male ORFS Connection (ISO 8434-3) >1-11/16–12 UN
- 24° Cone Connection (DIN 2353 / ISO 8434-1) >42L
- 24° Cone Connection (DIN 2353 / ISO 8434-1) >38S

Pressure Range
- Pressure range: up to 500 bar / 7250 PSI (depending on size and material combination of the ball valve)

Temperature Range
- Operating temperature range:
  -20 °C ... +100 °C / -4 °F ... + 212 °F

Options / Accessories
- Alternative lever designs/materials (see page 114)
- Locking devices (see pages 115-117)
- Actuator packages (see page 118)
- Limit switches (see page 118)
- Additional assembling threads / holes (see page 119)
- Stainless Steel body
- Stainless Steel ball and stem
- Special ball seat and O-ring materials available for lower/higher temperatures and more aggressive media
- Seal kits (including items marked by * in the above list)

Order Codes

BBV	-	2	-	G	02	-	0	0	0	1	-	M	-	-
①		②		③	④		⑤	⑥	⑦	⑧		⑨	⑩	⑪

① Type

High-Pressure Block Body Ball Valve	**BBV**

② Number of Ports

Two Ports (Two-Way Ball Valve)	**2**

③ Connection Style

Female BSP Thread (DIN ISO 228)	**G**
Female NPT Thread (ANSI B1.20.1)	**N**
Female UN/UNF Thread (SAE J 514)	**U**
Male ORFS Connection (ISO 8434-3)	**ORFS**
24° Cone Connection (Light / Heavy Series)	**—**

Please contact STAUFF for alternative connection styles.

④ Connection Size

STAUFF Size (according to dimension table) for connection styles G, N, U and ORFS:

02	04	06	08	10	12	16	20R	24R

Tube Size (according to dimension table) for 24° Cone Connection (Light Series):

06L	08L	10L	12L	15L	18L	22L	28L	35L	42L

Tube Size (according to dimension table) for 24° Cone Connection (Heavy Series):

06S	08S	10S	12S	14S	16S	20S	25S	30S	38S

Please contact STAUFF for alternative connection sizes.

⑤ Body Material / Surface Finishing

Carbon Steel, zinc/iron-plated	**0**
Carbon Steel, zinc/nickel-plated	**8**
Stainless Steel V4A (AISI 316Ti)	**1**

Note: Stainless steel version may vary in dimensions and design.
Alternative materials / surface finishings are available upon request. Contact STAUFF for further information.

⑥ Ball / Stem Material

Ball: Carbon Steel, hard chrome-plated Stem: Carbon Steel	**0**
Ball / Stem: Stainless Steel V4A (AISI 316Ti)	**1**
Ball: Brass, hard chrome-plated Stem: Carbon Steel	**2**

Alternative materials / surface finishings are available upon request. Contact STAUFF for further information.

⑦ Ball Seat Material

Delrin® (POM)	**0**

Alternative materials are available upon request. Contact STAUFF for further information.

⑧ O-Ring Material

NBR (Buna-N®)	**0**
FKM (Viton®)	**1**
EPDM	**3**

Alternative materials are available upon request. Contact STAUFF for further information.

⑨ Manufacturing Code

Manufacturing code for all connection style	**M**
Manufacturing code for high-pressure version of connection styles G, N and U (STAUFF Size 16)	**H**

⑩ Lever Options

Supplied with standard lever (according to table)	**—**
Supplied without lever	**0**

Alternative levers can be ordered separately. Please see page 114 for further information.

⑪ Accessories / Options

Supplied without accessories	**—**
Supplied with Locking Device LD1	**LD1**
Supplied with Locking Device LD2	**LD2**
Supplied with Locking Device LD3	**LD3**
Supplied with Locking Device LD4	**LD4**

Please see page 115-119 for further information and options.

A

zinc/nickel-plated

High-Pressure Block Body Ball Valve ▪ Type BBV-2
Female BSP Thread (DIN ISO 228)

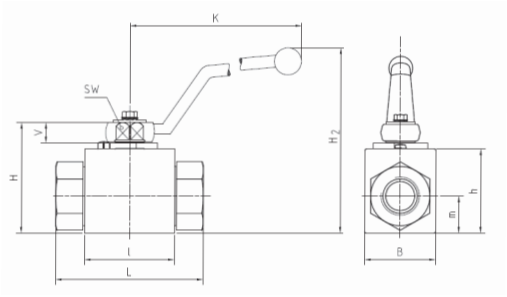

Female BSP Thread (DIN ISO 228)

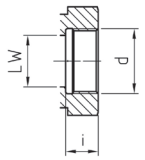

When ordering the standard option as indicated in the table below, the following materials will be supplied:

- Body, ball and stem: Carbon Steel
- Lever: Zinc (STAUFF Sizes 02 to 08)
  Aluminium (STAUFF Size 10)
  Carbon Steel (STAUFF Sizes 12 to 24R)
- Ball seat: Delrin® (POM)
- O-rings: FKM (Viton®)

STAUFF Size	Thread Size d	Nominal Size DN	Dimensions (mm/in) LW	L	l	B	H	h	m	V	SW	K	i	H2	Nom. Pressure (bar/PSI)	Weight (kg/lbs)	Order Codes (Standard Option)
02	G 1/8 BSP	4	5	69	40	26	47	33	13,5	11	9	115	10	82	500	0,41	BBV-2-G02-8001-M
			.20	2.70	1.57	1.02	1.84	1.29	.53	.43	.35	4.50	.39	3.23	7250	.90	
04	G 1/4 BSP	6	6	69	40	26	47	33	13,5	11	9	115	14	82	500	0,40	BBV-2-G04-8001-M
			.23	2.70	1.57	1.02	1.84	1.29	.53	.43	.35	4.50	.55	3.23	7250	.88	
06	G 3/8 BSP	10	10	72	43	32	52	38	17,5	11	9	115	14	87	500	0,54	BBV-2-G06-8001-M
			.39	2.82	1.68	1.25	2.04	1.49	.69	.43	.35	4.50	.55	3.43	7250	1.19	
08	G 1/2 BSP	13	13	83	48	35	54	40	19	11	9	115	16,3	89	500	0,65	BBV-2-G08-8001-M
			.51	3.25	1.88	1.37	2.11	1.57	.74	.43	.35	4.50	.64	3.50	7250	1.43	
10	G 5/8 BSP	16	15	83	48	38	63	46	19	13	12	160	16	106	420	0,70	BBV-2-G10-8001-M
			.59	3.25	1.88	1.49	2.47	1.80	.74	.51	.47	6.26	.63	4.17	6000	1.54	
12	G 3/4 BSP	20	20	95	62	49	75	57	24,5	14	14	170	18	126	420	1,50	BBV-2-G12-8001-M
			.78	3.72	2.43	1.92	2.94	2.23	.96	.55	.55	6.69	.70	4.96	6000	3.31	
16	G 1 BSP	25	25	113	66	58	83	65	29,5	14	14	170	20	134	350	2,20	BBV-2-G16-8001-M
			.98	4.42	2.58	2.27	3.25	2.55	1.16	.55	.55	6.69	.78	5.28	5076	4.85	
16	G 1 BSP	25	25	113	74	70	88	70	34,5	14	14	170	20	139	500	3,10	BBV-2-G16-8001-H
			.98	4.42	2.91	2.76	3.46	2.76	1.36	.55	.55	6.69	.78	5.47	7250	6.83	
20R	G 1-1/4 BSP	25/32	25	120	66	58	83	65	29,5	14	14	170	22	134	315	2,30	BBV-2-G20R-8001-M
			.98	4.70	2.58	2.27	3.25	2.55	1.16	.55	.55	6.69	.86	5.28	4500	5.07	
24R	G 1-1/2 BSP	25/40	25	130	66	58	83	65	29,5	14	14	170	24	134	250	2,60	BBV-2-G24R-8001-M
			.98	5.09	2.58	2.27	3.25	2.55	1.16	.55	.55	6.69	.94	5.28	3600	5.73	

Please note the pressure ratings of the tube connections.
Dimensions and design for stainless steel may vary.

zinc/nickel-plated

High-Pressure Block Body Ball Valve ▪ Type BBV-2
Female NPT Thread (ANSI B1.20.1)

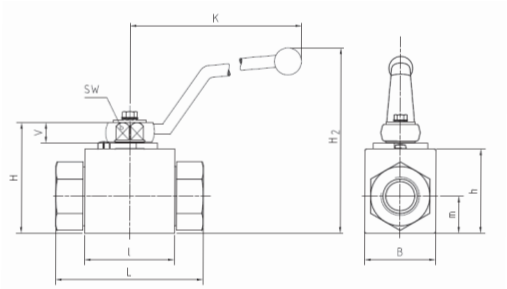

Female NPT Thread (ANSI B1.20.1)

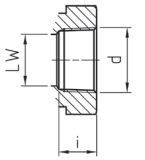

When ordering the standard option as indicated in the table below, the following materials will be supplied:

- Body, ball and stem: Carbon Steel
- Lever: Zinc (STAUFF Sizes 02 to 08)
  Carbon Steel (STAUFF Sizes 12 to 24R)
- Ball seat: Delrin® (POM)
- O-rings: FKM (Viton®)

STAUFF Size	Thread Size d	Nominal Size DN	Dimensions (mm/in) LW	L	l	B	H	h	m	V	SW	K	i	H2	Nom. Pressure (bar/PSI)	Weight (kg/lbs)	Order Codes (Standard Option)
02	1/8–27 NPT	4	5	69	40	26	47	33	13,5	11	9	115	10,5	82	500	0,30	BBV-2-N02-8001-M
			.20	2.70	1.57	1.02	1.84	1.29	.53	.43	.35	4.50	.41	3.23	7250	.66	
04	1/4–18 NPT	6	6	69	40	26	47	33	13,5	11	9	115	13,7	82	500	0,40	BBV-2-N04-8001-M
			.23	2.70	1.57	1.02	1.84	1.29	.53	.43	.35	4.50	.54	3.23	7250	.88	
06	3/8–18 NPT	10	10	72	43	32	52	38	17,5	11	9	115	13,5	87	500	0,50	BBV-2-N06-8001-M
			.39	2.82	1.68	1.25	2.04	1.49	.69	.43	.35	4.50	.53	3.43	7250	1.10	
08	1/2–14 NPT	13	13	83	48	35	54	40	19	11	9	115	17	89	500	0,75	BBV-2-N08-8001-M
			.51	3.25	1.88	1.37	2.11	1.57	.74	.43	.35	4.50	.67	3.50	7250	1.65	
12	3/4–14 NPT	20	20	95	62	49	75	57	24,5	14	14	170	18,3	126	420	1,63	BBV-2-N12-8001-M
			.78	3.72	2.43	1.92	2.94	2.23	.96	.55	.55	6.69	.72	4.96	6000	3.57	
16	1–11-1/2 NPT	25	25	113	66	58	83	65	29,5	14	14	170	21,6	134	350	2,30	BBV-2-N16-8001-M
			.98	4.42	2.58	2.27	3.25	2.55	1.16	.55	.55	6.69	.85	5.28	5076	5.06	
16	1–11-1/2 NPT	25	25	113	74	70	88	70	34,5	14	14	170	20	139	500	3,16	BBV-2-N16-8001-H
			.98	4.42	2.91	2.76	3.46	2.76	1.36	.55	.55	6.69	.78	5.47	7250	6.97	
20R	1-1/4–11-1/2 NPT	25/32	25	120	66	58	83	65	29,5	14	14	170	22,1	134	315	2,51	BBV-2-N20R-8001-M
			.98	4.70	2.58	2.27	3.25	2.55	1.16	.55	.55	6.69	.87	5.28	4500	5.52	
24R	1-1/2–11-1/2 NPT	25/40	25	130	66	58	83	65	29,5	14	14	170	22,1	134	250	2,70	BBV-2-N24R-8001-M
			.98	5.09	2.58	2.27	3.25	2.55	1.16	.55	.55	6.69	.87	5.28	3600	5.94	

Please note the pressure ratings of the tube connections.
Dimensions and design for stainless steel may vary.

A

zinc/nickel-plated

High-Pressure Block Body Ball Valve ▪ Type BBV-2
Female UN/UNF Thread (SAE J 514)

When ordering the standard option as indicated in the table below, the following materials will be supplied:

- Body, ball and stem: Carbon Steel
- Lever: Zinc (STAUFF Sizes 04 to 08)
  Carbon Steel (STAUFF Sizes 12 to 24R)
- Ball seat: Delrin® (POM)
- O-rings: FKM (Viton®)

Female UN/UNF Thread (SAE J 514)

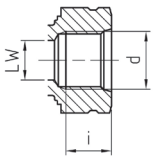

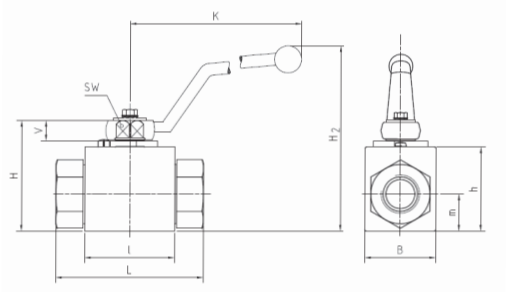

STAUFF Size	Thread Size d	Nominal Size DN	Dimensions (mm/in) LW	L	l	B	H	h	m	V	SW	K	i	H2	Nom. Pressure (bar/PSI)	Weight (kg/lbs)	Order Codes (Standard Option)
04	7/16–20 UNF	6	6	69	40	26	47	33	13,5	11	9	115	14	82	500	0,40	BBV-2-U04-8001-M
	(1/4" SAE)		.23	2.70	1.57	1.02	1.84	1.29	.53	.43	.35	4.50	.55	3.23	7250	.88	
06	9/16–18 UNF	10	10	72	43	32	52	38	17,5	11	9	115	14	87	500	0,50	BBV-2-U06-8001-M
	(3/8" SAE)		.39	2.82	1.68	1.25	2.04	1.49	.69	.43	.35	4.50	.55	3.43	7250	1.10	
08	3/4–16 UNF	13	13	83	48	35	54	40	19	11	9	115	16,3	89	500	0,70	BBV-2-U08-8001-M
	(1/2" SAE)		.51	3.25	1.88	1.37	2.11	1.57	.74	.43	.35	4.50	.64	3.50	7250	1.54	
12	1-1/16–12 UN	20	20	95	62	49	75	57	24,5	14	14	170	18	126	420	1,50	BBV-2-U12-8001-M
	(3/4" SAE)		.78	3.72	2.43	1.92	2.94	2.23	.96	.55	.55	6.69	.70	4.96	6000	3.31	
16	1-5/16–12 UN	25	25	113	66	58	83	65	29,5	14	14	170	20	134	350	2,20	BBV-2-U16-8001-M
	(1" SAE)		.98	4.42	2.58	2.27	3.25	2.55	1.16	.55	.55	6.69	.78	5.28	5076	4.85	
16	1-5/16–12 UN	25	25	121	74	70	88	70	34,5	14	14	170	20	139	500	2,20	BBV-2-U16-8001-H
	(1" SAE)		.98	4.76	2.91	2.76	3.46	2.76	1.36	.55	.55	6.69	.78	5.47	7250	4.85	
20R	1-5/8–12 UN	25/32	25	120	66	58	83	65	29,5	14	14	170	20	134	315	2,50	BBV-2-U20R-8001-M
	(1-1/4" SAE)		.98	4.70	2.60	2.28	3.27	2.56	1.16	.55	.55	6.69	.78	5.28	4500	5.50	
24R	1-7/8–12 UN	25/40	25	130	66	58	83	65	29,5	14	14	170	20	134	315	2,61	BBV-2-U24R-8001-M
	(1-1/2" SAE)		.98	5.09	2.60	2.28	3.27	2.56	1.16	.55	.55	6.69	.78	5.28	4500	5.74	

Please note the pressure ratings of the tube connections.
Dimensions and design for stainless steel may vary.

High-Pressure Block Body Ball Valve ▪ Type BBV-2
O-Ring Face Seal Connection ▪ Male Thread (ISO 8434-3)

When ordering the standard option as indicated in the table below, the following materials will be supplied:

- Body, ball and stem: Carbon Steel
- Lever: Zinc (STAUFF Sizes 04 to 08)
  Aluminium (STAUFF Size 10)
  Carbon Steel (STAUFF Sizes 12 and 16)
- Ball seat: Delrin® (POM)
- O-rings: FKM (Viton®)

ORFS Connection (ISO 8434-3)

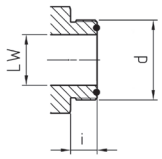

O-ring included in delivery.

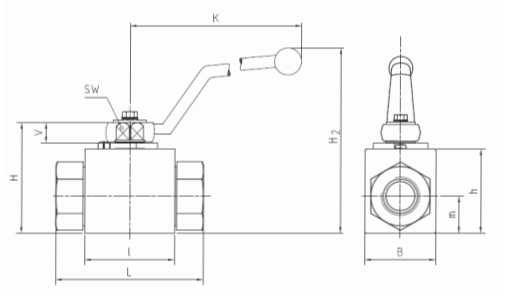

STAUFF Size	Thread Size d	Dimensions (mm/in) LW	L	l	B	H	h	m	V	SW	K	i	H2	O-ring	Nom. Pressure (bar/PSI)	Weight (kg/lbs)	Order Codes (Standard Option)
04	9/16–18 UNF	4,5	73	40	26	47	33	13,5	11	9	115	10	82	7,65 x 1,78	500	0,37	BBV-2-ORFS04-0001-M
		.18	2.87	1.57	1.02	1.84	1.29	.53	.43	.35	4.50	.39	3.23		7250	.81	
06	11/16–16 UN	6,5	73	40	26	47	33	13,5	11	9	115	11	82	9,25 x 1,78	500	0,38	BBV-2-ORFS06-0001-M
		.26	2.87	1.57	1.02	1.84	1.29	.53	.43	.35	4.50	.43	3.23		7250	.83	
08	13/16–16 UN	9,5	78	43	32	52	38	17,5	11	9	115	13	87	12,42 x 1,78	500	0,50	BBV-2-ORFS08-0001-M
		.37	3.07	1.68	1.25	2.04	1.49	.69	.43	.35	4.50	.51	3.43		7250	1.10	
10	1–14 UNS	12,5	90	48	35	54	40	19	11	9	115	15,5	89	15,60 x 1,78	420	0,61	BBV-2-ORFS10-0001-M
		.49	3.54	1.88	1.37	2.11	1.57	.74	.43	.35	4.50	.61	3.50		6000	1.34	
12	1-3/16–12 UN	15,5	98	48	35	63	40	19	13	12	160	17	106	18,77 x 1,78	420	0,80	BBV-2-ORFS12-0001-M
		.61	3.86	1.88	1.37	2.47	1.57	.74	.51	.47	6.26	.67	4.17		6000	1.76	
16	1-7/16–12 UN	20,5	111	62	49	75	57	24,5	14	14	170	17,5	126	23,52 x 1,78	315	1,55	BBV-2-ORFS16-0001-M
		.81	4.37	2.43	1.92	2.94	2.23	.96	.55	.55	6.69	.69	4.96		4500	3.41	
20	1-11/16–12 UN	26	120	66	58	83	65	29,5	14	14	170	17,5	134	29,87 x 1,78	315	2,10	BBV-2-ORFS20-0001-M
		1.02	4.72	2.58	2.27	3.25	2.55	1.16	.55	.55	6.69	.69	5.28		4500	4.63	

Please note the pressure ratings of the tube connections.
Dimensions and design for stainless steel may vary.

A

zinc/nickel-plated

High-Pressure Block Body Ball Valve ▪ Type BBV-2
24° Cone Connection ▪ Light Series (DIN 2353 / ISO 8434-1)

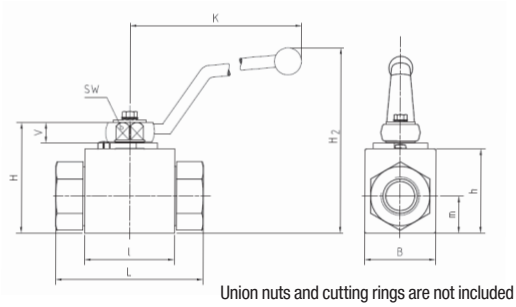

Union nuts and cutting rings are not included in delivery.

24° Cone Connection (DIN 2353 / ISO 8434-1)

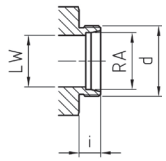

When ordering the standard option as indicated in the table below, the following materials will be supplied:

- Body, ball and stem: Carbon Steel
- Lever: Zinc (STAUFF Sizes 02 to 08)
  Carbon Steel (STAUFF Sizes 12 to 24R)
- Ball seat: Delrin® (POM)
- O-rings: FKM (Viton®)

STAUFF Size	Tube/Thread Size d	Nominal Size DN	Dimensions (mm/in) RA	LW	L	l	B	H	h	m	V	SW	K	i	H2	Nom. Pressure (bar/PSI)	Weight (kg/lbs)	Order Codes (Standard Option)
02	06L / M12 x 1,5	4	6	5	67	40	26	47	33	13,5	11	9	115	10	82	500	0,36	BBV-2-06L-8001-M
			.24	.20	2.64	1.57	1.02	1.85	1.30	.53	.43	.35	4.53	.39	3.23	7250	.79	
04	08L / M14 x 1,5	6	8	6	67	40	26	47	33	13,5	11	9	115	10	82	500	0,37	BBV-2-08L-8001-M
			.31	.24	2.64	1.57	1.02	1.85	1.30	.53	.43	.35	4.53	.39	3.23	7250	.81	
05	10L / M16 x 1,5	8	10	8	74	40	26	47	33	13,5	11	9	115	11	82	500	0,38	BBV-2-10L-8001-M
			.39	.31	2.91	1.57	1.02	1.85	1.30	.53	.43	.35	4.53	.43	3.23	7250	.83	
06	12L / M18 x 1,5	10	12	10	74	43	32	52	38	17,5	11	9	115	11	87	500	0,50	BBV-2-12L-8001-M
			.47	.39	2.91	1.69	1.26	2.05	1.50	.69	.43	.35	4.53	.43	3.43	7250	1.10	
08	15L / M22 x 1,5	13	15	13	82	48	35	54	40	19	11	9	115	12	89	500	0,61	BBV-2-15L-8001-M
			.59	.51	3.23	1.89	1.38	2.13	1.57	.75	.43	.35	4.53	.47	3.50	7250	1.34	
08	18L / M26 x 1,5	13	18	13	82	48	35	54	40	19	11	9	115	12	89	500	0,60	BBV-2-18LDN13-8001-M
			.71	.51	3.23	1.89	1.38	2.13	1.57	.75	.43	.35	4.53	.47	3.50	7250	1.32	
12	22L / M30 x 2	20	22	20	101	62	49	75	57	24,5	14	14	170	14	126	420	1,49	BBV-2-22L-8001-M
			.87	.79	3.98	2.44	1.93	2.95	2.24	.96	.55	.55	6.69	.55	4.96	6000	3.33	
16	28L / M36 x 2	25	28	25	108	66	58	83	65	29,5	14	14	170	14	134	315	2,00	BBV-2-28L-8001-M
			1.10	.98	4.25	2.60	2.28	3.27	2.56	1.16	.55	.55	6.69	.55	5.28	4500	4.41	
20R	35L / M45 x 2	25/32	35	25	112	66	58	83	65	29,5	14	14	170	16	134	315	2,12	BBV-2-35LDN25-8001-M
			1.38	.98	4.41	2.60	2.28	3.27	2.56	1.16	.55	.55	6.69	.63	5.28	4500	4.66	
24R	42L / M52 x 2	25/40	42	25	112	66	58	83	65	29,5	14	14	170	16	134	315	2,27	BBV-2-42LDN25-8001-M
			1.65	.98	4.41	2.60	2.28	3.27	2.56	1.16	.55	.55	6.69	.63	5.28	4500	4.99	

Please note the pressure ratings of the tube connections.
Dimensions and design for stainless steel may vary.

zinc/nickel-plated

High-Pressure Block Body Ball Valve ▪Type BBV-2
24° Cone Connection ▪ (DIN 2353 / ISO 8434-1)

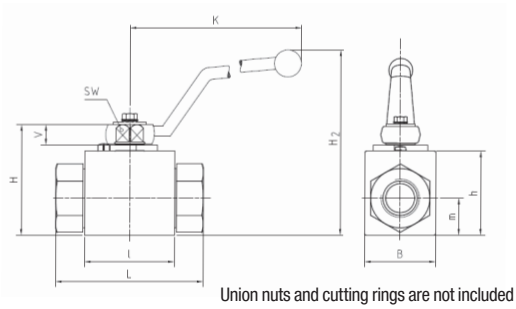

Union nuts and cutting rings are not included in delivery.

24° Cone Connection (DIN 2353 / ISO 8434-1)

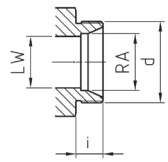

When ordering the standard option as indicated in the table below, the following materials will be supplied:

- Body, ball and stem: Carbon Steel
- Lever: Zinc (STAUFF Sizes 02 to 08)
  Aluminium (STAUFF Size 10)
  Carbon Steel (STAUFF Sizes 12 to 24R)
- Ball seat: Delrin® (POM)
- O-rings: FKM (Viton®)

STAUFF Size	Tube/Thread Size d	Nominal Size DN	Dimensions (mm/in) RA	LW	L	l	B	H	h	m	V	SW	K	i	H2	Nom. Pressure (bar/PSI)	Weight (kg/lbs)	Order Codes (Standard Option)
02	08S / M16 x 1,5	4	8	5	73	40	26	47	33	13,5	11	9	115	10	82	500	0,38	BBV-2-08S-8001-M
			.31	.20	2.87	1,57	1.02	1.85	1.30	.53	.43	.35	4.53	.39	3.23	7250	.84	
04	10S / M18 x 1,5	6	10	6	73	40	26	47	33	13,5	11	9	115	10	82	500	0,39	BBV-2-10S-8001-M
			.39	.24	2.87	1.57	1.02	1.85	1.30	.53	.43	.35	4.53	.39	3.23	7250	.86	
05	12S / M20 x 1,5	8	12	8	76	40	26	47	33	13,5	11	9	115	11	82	500	0,39	BBV-2-12S-8001-M
			.47	.31	2.99	1.57	1.02	1.85	1.30	.53	.43	.35	4.53	.43	3.23	7250	.86	
06	14S / M22 x 1,5	10	14	10	80	43	32	52	38	17,5	11	9	115	11	87	500	0,50	BBV-2-14S-8001-M
			.55	.39	3.15	1.69	1.26	2.05	1.50	.69	.43	.35	4.53	.43	3.43	7250	1.10	
08	16S / M24 x 1,5	13	16	13	86	48	35	54	40	19	11	9	115	12	89	500	0,60	BBV-2-16S-8001-M
			.63	.51	3.39	1.89	1.38	2.13	1.57	.75	.43	.35	4.53	.47	3.50	7250	1.32	
08	20S / M30 x 2	13	20	13	90	48	35	54	40	19	11	9	115	12	89	500	0,60	BBV-2-20SDN13-8001-M
			.79	.51	3,54	1.89	1.38	2.13	1.57	.75	.43	.35	4.53	.47	3.50	7250	1.32	
10	20S / M30 x 2	16	20	15	90	48	38	54	46	19	13	12	160	16	106	420	0,80	BBV-2-20S-8001-M
			.79	.59	3,54	1.89	1,50	2.13	1.81	.75	.51	.47	6.26	.63	4.17	6000	1.76	
12	25S / M36 x 2	20	25	20	109	62	49	75	57	24,5	14	14	170	18	126	420	1,55	BBV-2-25S-8001-M
			.98	.79	4.29	2.44	1.93	2.95	2.24	.96	.55	.55	6.69	.71	4.96	6000	3.41	
16	30S / M42 x 2	25	30	25	120	66	58	75	65	29,5	14	14	170	20	134	315	2,10	BBV-2-30S-8001-M
			1.18	.98	4.72	2.60	2.28	2.95	2.56	1.16	.55	.55	6.69	.79	5.28	4500	4.63	
20R	38S / M52 x 2	25/32	38	25	124	66	58	83	65	29,5	14	14	170	22	134	315	2,30	BBV-2-38SDN25-8001-M
			1.50	.98	4.88	2.60	2.28	3.27	2.56	1.16	.55	.55	6.69	.87	5.28	4500	5.07	

Please note the pressure ratings of the tube connections.
Dimensions and design for stainless steel may vary.

A

High-Pressure Forged Body Ball Valve ▪ Type FBV-2

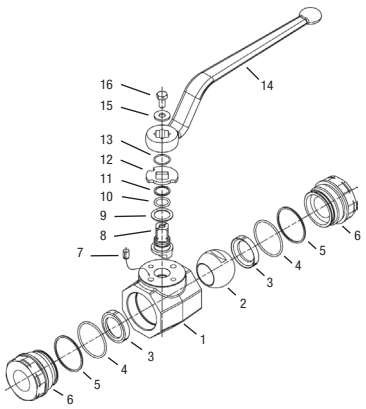

List of Components

No.	Qty.	Description
1	1	Body
2	1	Ball
3*	2	Seat
4*	2	Connector O-Ring
5*	2	Connector Back-Up Ring
6	2	Connector
7	1	Stop Pin
8	1	Stem
9*	1	Thrust Ring
10*	1	Stem O-Ring
11*	1	Stem Back-Up Ring
12	1	Cam Plate
13	1	Snap Ring
14	1	Handle
15	1	Washer
16	1	Stem Bolt

Characteristics

Two-way high-pressure forged body ball valves designed for use as on/off devices for hydraulic applications

Standard Construction
- Forged body design for in-line assembly
- Supplied with off-set lever

Standard Materials
- Body: Carbon Steel, zinc/iron-plated
- Ball: Carbon Steel, hard chrome-plated
- Stem: Carbon Steel
- Lever: Carbon Steel
- Ball seat: Delrin® (POM)
- O-rings: FKM (Viton®)

Standard Connections Styles / Sizes
- Female BSP thread (DIN ISO 228) >G 2 BSP
- Female NPT thread (ANSI B1.20.1) >2–11-1/2 NPT
- Female UN/UNF thread (SAE J 514) >2-1/2–12 UN (2" SAE)
- Male ORFS Connection (ISO 8434-3) >2–12 UN
- 24° Cone Connection (DIN 2353 / ISO 8434-1) >42L
- 24° Cone Connection (DIN 2353 / ISO 8434-1) >38S

Pressure Range
- Pressure range: up to 420 bar / 6000 PSI (depending on size and material combination of the ball valve)

Temperature Range
- Operating temperature range: -20 °C ... +100 °C / -4 °F ... + 212 °F

Options / Accessories
- Alternative lever designs/materials (see page 114)
- Locking devices (see pages 115-117)
- Actuator packages (see page 118)
- Limit switches (see page 118)
- Additional assembling threads / holes (see page 119)
- Stainless Steel body
- Stainless Steel ball and stem
- Special ball seat and O-ring materials available for lower/higher temperatures and more aggressive media
- Seal kits (including items marked by * in the above list)

Order Codes

FBV	-	2	-	G	20	-	0	0	0	1	-	M	-	-
①		②		③	④		⑤	⑥	⑦	⑧		⑨	⑩	⑪

① Type

High-Pressure Forged Body Ball Valve	**FBV**

② Number of Ports

Two Ports (Two-Way Ball Valve)	**2**

③ Connection Style

Female BSP Thread (DIN ISO 228)	**G**
Female NPT Thread (ANSI B1.20.1)	**N**
Female UN/UNF Thread (SAE J 514)	**U**
Male ORFS Connection (ISO 8434-3)	**ORFS**
24° Cone Connection (Light / Heavy Series)	**—**

Please contact STAUFF for alternative connection styles.

④ Connection Size

STAUFF Size (according to dimension table) for connection styles G, N, U and B:	**20 24 32**
Tube Size (according to dimension table) for 24° Cone Connection (Light Series):	**35L**
Tube Size (according to dimension table) for 24° Cone Connection (Light Series):	**42L**
Tube Size (according to dimension table) for 24° Cone Connection (Heavy Series):	**38S**

Please contact STAUFF for alternative connection sizes.

⑤ Body Material / Surface Finishing

Carbon Steel, zinc/iron-plated	**0**
Stainless Steel V4A (AISI 316Ti)	**1**

Note: Stainless steel version may vary in dimensions and design.
Alternative materials / surface finishings are available upon request. Contact STAUFF for further information.

⑥ Ball / Stem Material

Ball: Carbon Steel, hard chrome-plated Stem: Carbon Steel	**0**
Ball / Stem: Stainless Steel V4A (AISI 316Ti)	**1**

Alternative materials / surface finishings are available upon request. Contact STAUFF for further information.

⑦ Ball Seat Material

Delrin® (POM)	**0**

Alternative materials are available upon request. Contact STAUFF for further information.

⑧ O-Ring Material

NBR (Buna-N®)	**0**
FKM (Viton®)	**1**

Alternative materials are available upon request. Contact STAUFF for further information.

⑨ Manufacturing Code

Manufacturing code for all connection styles	**M**

⑩ Lever Options

Supplied with standard lever (according to table)	**—**
Supplied without lever	**0**

Alternative levers can be ordered separately.
Please see page 114 for further information.

⑪ Accessories / Options

Supplied without accessories	**—**
Supplied with Locking Device LD1	**LD1**
Supplied with Locking Device LD2	**LD2**
Supplied with Locking Device LD3	**LD3**
Supplied with Locking Device LD4	**LD4**
Supplied with Locking Device LD6 (US version)	**LD6**

Please see page 115-119 for further information and options.

A

High-Pressure Forged Body Ball Valve ▪ Type FBV-2
Female BSP Thread (DIN ISO 228)

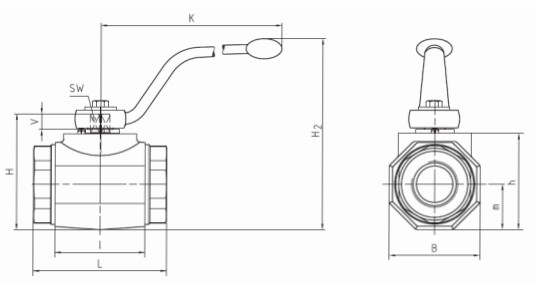

Female BSP Thread (DIN ISO 228)

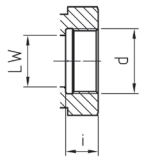

When ordering the standard option as indicated in the table below, the following materials will be supplied:

- Body, ball and stem: Carbon Steel
- Lever: Carbon Steel
- Ball seat: Delrin® (POM)
- O-rings: FKM (Viton®)

STAUFF Size	Thread Size d	Nominal Size DN	Dimensions (mm/in) LW	L	l	B	H	h	m	V	SW	K	i	H2	Nom. Pressure (bar/PSI)	Weight (kg/lbs)	Order Codes (Standard Option)
20	G 1-1/4 BSP	32	32	111	80	81	107	86	40,5	16,5	17	306	22	171	420	3,47	FBV-2-G20-0001-M
			1.26	4.37	3.15	3.19	4.21	3.39	1.59	.65	.67	12.05	.87	6.73	6000	7.63	
24	G 1-1/2 BSP	40	38	130	85	100	124	103	50	16,5	17	306	24	188	420	5,67	FBV-2-G24-0001-M
			1.50	5.12	3.35	3.94	4.88	4.06	1.97	.65	.67	12.05	.94	7.40	6000	12.47	
32	G 2 BSP	50	48	140	100	118	138	117	59	16,5	17	306	26	202	420	8,14	FBV-2-G32-0001-M
			1.89	5.51	3.94	4.65	2.43	4.61	2.32	.65	.67	12.05	1.02	7.96	6000	17.91	

Please note the pressure ratings of the tube connections.
Dimensions and design for stainless steel may vary.

High-Pressure Forged Body Ball Valve ▪ Type FBV-2
Female NPT Thread (ANSI B1.20.1)

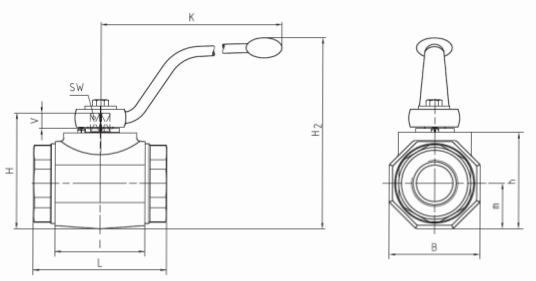

Female NPT Thread (ANSI B1.20.1)

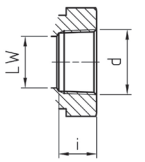

When ordering the standard option as indicated in the table below, the following materials will be supplied:

- Body, ball and stem: Carbon Steel
- Lever: Carbon Steel
- Ball seat: Delrin® (POM)
- O-rings: FKM (Viton®)

STAUFF Size	Thread Size d	Nominal Size DN	Dimensions (mm/in) LW	L	l	B	H	h	m	V	SW	K	i	H2	Nom. Pressure (bar/PSI)	Weight (kg/lbs)	Order Codes (Stand ard Option)
20	1-1/4–11-1/2 NPT	32	32	111	80	81	107	86	40,5	16,5	17	306	22	171	420	3,47	FBV-2-N20-0001-M
			1.26	4.37	3.15	3.19	4.21	3.39	1.59	.65	.67	12.05	.87	6.73	6000	7.63	
24	1-1/2–11-1/2 NPT	40	38	130	85	100	124	103	50	16,5	17	306	24	188	420	5,67	FBV-2-N24-0001-M
			1.50	5.12	3.35	3.94	4.88	4.06	1.97	.65	.67	12.05	.94	7.40	6000	12.47	
32	2–11-1/2 NPT	50	48	140	100	118	138	117	59	16,5	17	306	26	202	420	8,14	FBV-2-N32-0001-M
			1.89	5.51	3.94	4.65	2.43	4.61	2.32	.65	.67	12.05	1.02	7.96	6000	17.91	

Please note the pressure ratings of the tube connections.
Dimensions and design for stainless steel may vary.

A

High-Pressure Forged Body Ball Valve ▪ Type FBV-2
Female UN/UNF Thread (SAE J 514)

When ordering the standard option as indicated in the table below, the following materials will be supplied:

- Body, ball and stem: Carbon Steel
- Lever: Carbon Steel
- Ball seat: Delrin® (POM)
- O-rings: FKM (Viton®)

Female UN/UNF Thread (SAE J 514)

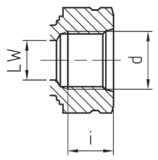

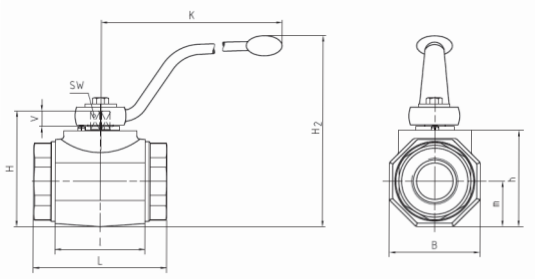

STAUFF Size	Thread Size d	Nominal Size DN	Dimensions (mm/in) LW	L	I	B	H	h	m	V	SW	K	i	H2	Nom. Pressure (bar/PSI)	Weight (kg/lbs)	Order Codes (Standard Option)
20	1-5/8–12 UN (1-1/4" SAE)	32	30	111	80	81	107	86	40,5	16,5	17	306	20	171	420	3,52	FBV-2-U20-0001-M
			1.18	4.37	3.15	3.19	4.21	3.39	1.59	.65	.67	12.05	.79	6.73	6000	7.75	
24	1-7/8–12 UN (1-1/2" SAE)	40	38	130	85	100	124	103	50	16,5	17	306	20	188	420	5,69	FBV-2-U24-0001-M
			1.50	5.12	3.35	3.94	4.88	4.06	1.97	.65	.67	12.05	.79	7.40	6000	12.52	
32	2-1/2–12 UN (2" SAE)	50	45	140	100	118	138	117	59	16,5	17	306	20	202	420	8,14	FBV-2-U32-0001-M
			1.79	5.51	3.94	4.65	2.43	4.61	2.32	.65	.67	12.05	.79	7.96	6000	17.91	

Please note the pressure ratings of the tube connections.
Dimensions and design for stainless steel may vary.

High-Pressure Forged Body Ball Valve ▪ Type FBV-2
O-Ring Face Seal Connection ▪ Male Thread (ISO 8434-3)

When ordering the standard option as indicated in the table below, the following materials will be supplied:

- Body, ball and stem: Carbon Steel
- Lever: Carbon Steel
- Ball seat: Delrin® (POM)
- O-rings: FKM (Viton®)

ORFS Connection (ISO 8434-3)

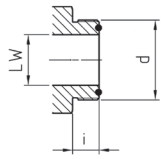

O-ring included in delivery.

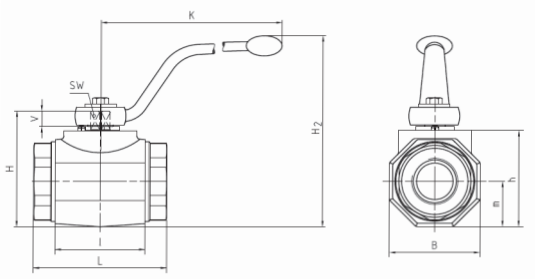

STAUFF Size	Thread Size d	Nominal Size DN	Dimensions (mm/in) LW	L	I	B	H	h	m	V	SW	K	i	H2	O-ring	Nom. Pressure (bar/PSI)	Weight (kg/lbs)	Order Codes (Standard Option)
20	2–12 UN	32	32	139	80	81	107	86	40,5	16,5	17	306	17,5	171	37,82 x 1,78	320	3,52	FBV-2-ORFS20-0001-M
			1.26	5.47	3.15	3.19	4.21	3.39	1.59	.65	.67	12.05	.69	6.73		4600	7.75	

Please note the pressure ratings of the tube connections.
Dimensions and design for stainless steel may vary.

A

High-Pressure Forged Body Ball Valve ▪ Type FBV-2
24° Cone Connection ▪ Light Series (DIN 2353 / ISO 8434-1)

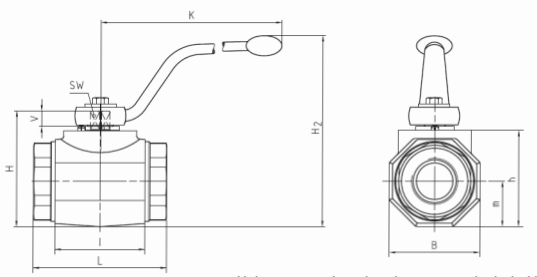

Union nuts and cutting rings are not included in delivery.

24° Cone Connection (DIN 2353 / ISO 8434-1)

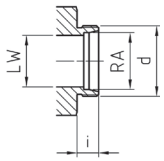

When ordering the standard option as indicated in the table below, the following materials will be supplied:

- Body, ball and stem: Carbon Steel
- Lever: Carbon Steel
- Ball seat: Delrin® (POM)
- O-rings: FKM (Viton®)

STAUFF Size	Tube/Thread Size d	Nominal Size DN	Dimensions (mm/in) RA	LW	L	l	B	H	h	m	V	SW	K	i	H2	Nom. Pressure (bar/PSI)	Weight (kg/lbs)	Order Codes (Standard Option)
20	35L / M45 x 2	32	35	32	136	80	81	107	86	40,5	16,5	17	306	16	171	420	3,58	FBV-2-35L-0001-M
			1.38	1.26	5.35	3.15	3.19	4.21	3.39	1.59	.65	.67	12.05	.63	6.73	6000	7.88	
24	42L / M52 x 2	40	42	38	147	85	100	124	103	50	16,5	17	306	16	188	420	5,54	FBV-2-42L-0001-M
			1.65	1.50	5.79	3.35	3.94	4.88	4.06	1.97	.65	.67	12.05	.63	7.40	6000	12.19	

Please note the pressure ratings of the tube connections.
Dimensions and design for stainless steel may vary.

High-Pressure Forged Body Ball Valve ▪ Type FBV-2
24° Cone Connection ▪ Heavy Series (DIN 2353 / ISO 8434-1)

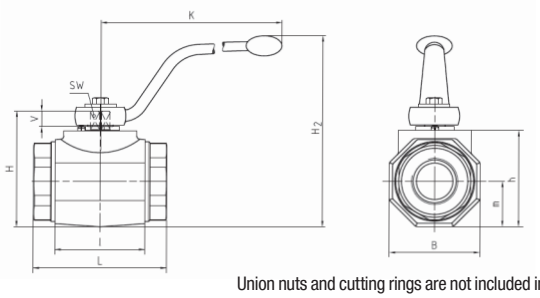

Union nuts and cutting rings are not included in delivery.

24° Cone Connection (DIN 2353 / ISO 8434-1)

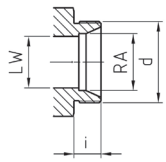

When ordering the standard option as indicated in the table below, the following materials will be supplied:

- Body, ball and stem: Carbon Steel
- Lever: Carbon Steel
- Ball seat: Delrin® (POM)
- O-rings: FKM (Viton®)

STAUFF Size	Tube/Thread Size d	Nominal Size DN	Dimensions (mm/in) RA	LW	L	l	B	H	h	m	V	SW	K	i	H2	Nom. Pressure (bar/PSI)	Weight (kg/lbs)	Order Codes (Standard Option)
20	38S / M52 x 2	32	38	32	148	80	81	107	86	40,5	16,5	17	306	22	171	420	3,77	FBV-2-38S-0001-M
			1.50	1.26	5.83	3.15	3.19	4.21	3.39	1.59	.65	.67	12.05	.87	6.73	6000	8,29	

Please note the pressure ratings of the tube connections.
Dimensions and design for stainless steel may vary.

A

High-Pressure 800 bar / 12000 PSI Block Body Ball Valve ▪ Type HBV-2

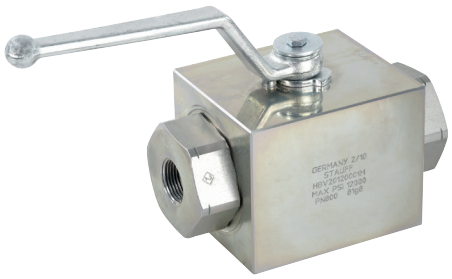

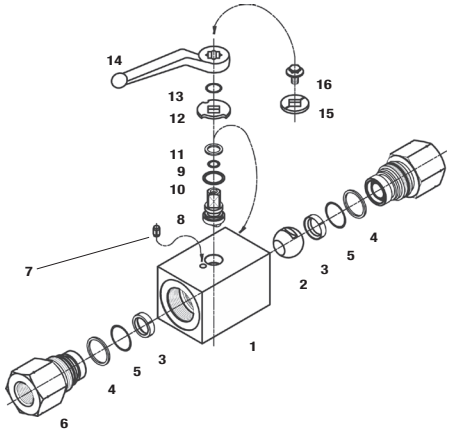

List of Components

No.	Qty.	Description
1	1	Body
2	1	Ball
3*	2	Seat
4*	2	Connector O-Ring
5*	2	Pipe Back-up Ring
6	2	Connector
7	1	Stop Pin
8	1	Stem
9*	1	Thrust Ring
10*	1	Stem O-Ring
11*	1	Pipe Back-up
12	1	Cam Plate
13	1	Snap Ring
14	1	Handle
15	1	Flow Indicator
16	1	Stem Screw

Characteristics

Two-way high-pressure block body ball valves designed for use as on/off devices for hydraulic applications (for pressures up to 800 bar / 12000 PSI)

Standard Construction
- Block body design for in-line assembly
- Supplied with off-set lever

Standard Materials
- Body: Carbon Steel, zinc/iron-plated
- Ball: Carbon Steel, hard chrome-plated
- Stem: Carbon Steel
- Lever: Carbon Steel
- Ball seat: POM, encased
- O-rings: FKM (Viton®)

Standard Connections Styles / Sizes
- Female NPT thread (ANSI B1.20.1) >1–11-1/2 NPT
- 24° Cone Connection (DIN 2353 / ISO 8434-1); >30S

Pressure Range
- Pressure range: up to 800 bar / 12000 PSI (depending on size and material combination of the ball valve)

Temperature Range
- Operating temperature range: -20 °C ... +100 °C / -4 °F ... + 212 °F

Options / Accessories
- Alternative lever designs/materials (see page 114)
- Locking devices (see pages 115-117)
- Actuator packages (see page 118)
- Limit switches (see page 118)
- Additional assembling threads / holes (see page 119)
- Stainless Steel body
- Stainless Steel ball and stem
- Special ball seat and O-ring materials available for lower/higher temperatures and more aggressive media
- Seal kits (including items marked by * in the above list)

Order Codes

HBV	-	2	-	N	16	-	0	0	B	1	-	M	-	-
①		②		③	④		⑤	⑥	⑦	⑧		⑨	⑩	⑪

① Type

High-Pressure Block Body Ball Valve	**HBV**

② Number of Ports

Two Ports (Two-Way Ball Valve)	**2**

③ Connection Style

Female NPT Thread (ANSI B1.20.1)	**N**
24° Cone Connection (Heavy Series)	**—**

Please contact STAUFF for alternative connection styles.

④ Connection Size

STAUFF Size (according to dimension table) for connection style N:

04	**06**	**08**	**12**	**16**

Tube Size (according to dimension table) for 24° Cone Connection (Heavy Series):

08S	**10S**	**12S**	**14S**	**16S**	**20S**	**25S**	**30S**

Please contact STAUFF for alternative connection sizes.

⑤ Body Material / Surface Finishing

Carbon Steel, zinc/iron-plated	**0**
Stainless Steel V4A (AISI 316Ti)	**1**

Note: Stainless steel version may vary in dimensions and design.
Alternative materials / surface finishings are available upon request. Contact STAUFF for further information.

⑥ Ball / Stem Material

Ball: Carbon Steel, hard chrome-plated Stem: Carbon Steel	**0**
Ball / Stem: Stainless Steel V4A (AISI 316Ti)	**1**

Alternative materials / surface finishings are available upon request. Contact STAUFF for further information.

⑦ Ball Seat Material

POM, encased	**B**

Alternative materials are available upon request. Contact STAUFF for further information.

⑧ O-Ring Material

NBR (Buna-N®)	**0**
FKM (Viton®)	**1**

Alternative materials are available upon request. Contact STAUFF for further information.

⑨ Manufacturing Code

Manufacturing code for all connection styles	**M**

⑩ Lever Options

Supplied with standard lever (according to table)	**—**
Supplied without lever	**0**

Alternative levers can be ordered separately. Please see page 114 for further information.

⑪ Accessories / Options

Supplied without accessories	**—**
Supplied with Locking Device LD1	**LD1**
Supplied with Locking Device LD4	**LD4**

Please see page 115-119 for further information and options.

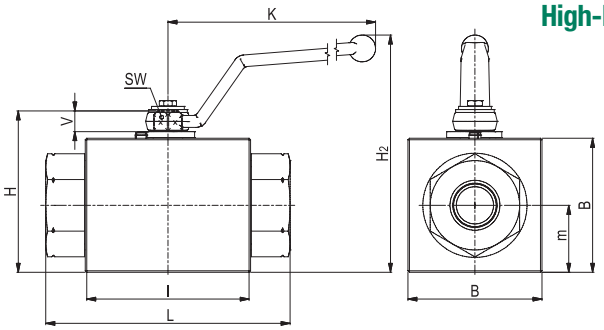

High-Pressure 800 bar / 12000 PSI Block Body Ball Valve ▪ Type HBV-2 Female NPT Thread (ANSI B1.20.1)

Female NPT Thread (ANSI B1.20.1)

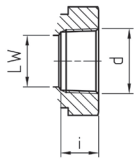

When ordering the standard option as indicated in the table below, the following materials will be supplied:

- Body, ball and stem: Carbon Steel
- Lever: Carbon Steel
- Ball seat: POM, encased
- O-rings: FKM (Viton®)

STAUFF Size	Thread Size d	Nominal Size DN	Dimensions (mm/in) LW	L	l	B	H	m	V	SW	K	i	H2	Nom. Pressure (bar/PSI)	Weight (kg/lbs)	Order Codes (Standard Option)
04	1/4–18 NPT	6	6	130	76	50	64	25	11	9	115	13,7	101	800	1,92	HBV-2-N04-00B1-M
			.39	8.44	4.94	3.25	4.16	1.62	.71	.58	4.53	.89	3.98	12000	4.22	
06	3/8–18 NPT	10	13	130	76	50	64	25	11	9	115	13,5	101	800	1,85	HBV-2-N06-00B1-M
			.84	8.44	4.94	3.25	4.16	1.62	.71	.58	4.53	.88	3.98	12000	4.07	
08	1/2–14 NPT	13	13	130	76	50	64	25	11	9	115	17	101	800	1,79	HBV-2-N08-00B1-M
			.84	8.44	4.94	3.25	4.16	1.62	.71	.58	4.53	1.10	3.98	12000	3.93	
12	3/4–14 NPT	20	20	161	111	90	108	45	14	14	171	18,3	159	800	7,83	HBV-2-N12-00B1-M
			1.30	10.45	7.21	5.84	7.01	2.92	.91	.91	6.73	1.19	6.26	12000	17.23	
16	1–11 NPT	25	25	164	111	90	108	45	14	14	171	21,6	159	800	7,68	HBV-2-N16-00B1-M
			1.62	10.65	7.21	5.84	7.01	2.92	.91	.91	6.73	1.40	6.26	12000	16.90	

Please note the pressure ratings of the tube connections.
Dimensions and design for stainless steel may vary.

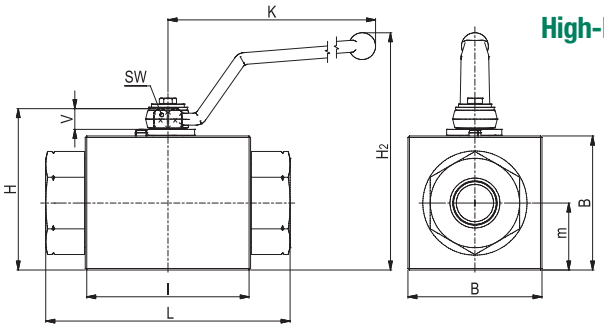

High-Pressure 800 bar / 12000 PSI Block Body Ball Valve ▪ Type HBV-2 24° Cone Connection ▪ Heavy Series (DIN 2353 / ISO 8434-1)

24° Cone Connection (DIN 2353 / ISO 8434-1)

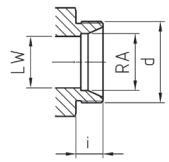

When ordering the standard option as indicated in the table below, the following materials will be supplied:

- Body, ball and stem: Carbon Steel
- Lever: Zinc
- Ball seat: POM, encased
- O-rings: FKM (Viton®)

Union nuts and cutting rings are not included in delivery.

STAUFF Size	Tube/Thread Size d	Nominal Size DN	Dimensions (mm/in) RA	LW	L	l	B	H	m	V	SW	K	i	H2	Nom. Pressure (bar/PSI)	Weight (kg/lbs)	Order Codes (Standard Option)
02	08S / M16 x 1,5	4	8	5	110	76	50	64	25	11	9	115	12	101	800	1,60	HBV-2-08S-00B1-M
			.31	.20	4.33	2.99	1.97	2.52	.98	.43	.35	4.53	.47	3.98	12000	3.52	
04	10S / M18 x 1,5	6	10	6	114	76	50	64	25	11	9	115	12	101	800	1,60	HBV-2-10S-00B1-M
			.39	.24	4.49	2.99	1.97	2.52	.98	.43	.35	4.53	.47	3.98	12000	3.52	
05	12S / M20 x 1,5	8	12	8	114	76	50	64	25	11	9	115	12	101	800	1,64	HBV-2-12S-00B1-M
			.47	.31	4.49	2.99	1.97	2.52	.98	.43	.35	4.53	.47	3.98	12000	3.61	
06	14S / M22 x 1,5	10	14	13	114	76	50	64	25	11	9	115	14	101	800	1,56	HBV-2-14S-00B1-M
			.55	.51	4.49	2.99	1.97	2.52	.98	.43	.35	4.53	.55	3.98	12000	3.43	
08	16S / M24 x 1,5	13	16	13	114	76	50	64	25	11	9	115	14	101	800	1,58	HBV-2-16S-00B1-M
			.63	.51	4.49	2.99	1.97	2.52	.98	.43	.35	4.53	.55	3.98	12000	3.48	
08	20S / M30 x 2	13	20	13	118	76	50	64	25	11	9	115	16	101	800	1,63	HBV-2-20SDN13-00B1-M
			.79	.51	4.65	2.99	1.97	2.52	.98	.43	.35	4.53	.63	3.98	12000	3.59	
12	25S / M36 x 2	20	25	20	162	111	90	108	45	14	14	171	18	159	800	7,31	HBV-2-25S-00B1-M
			.98	.79	6.38	4.37	3.54	4.25	1.77	.55	.55	6.73	.71	6.26	12000	16.08	
16	30S / M42 x 2	25	30	25	166	111	90	108	45	14	14	171	20	159	800	7,40	HBV-2-30S-00B1-M
			1.18	.98	6.54	4.37	3.54	4.25	1.77	.55	.55	6.73	.79	6.26	12000	16.28	

Please note the pressure ratings of the tube connections.
Dimensions and design for stainless steel may vary.

A

High-Pressure Block Body Ball Valve ▪ Type BBV-2-F

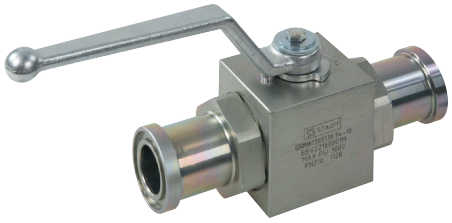

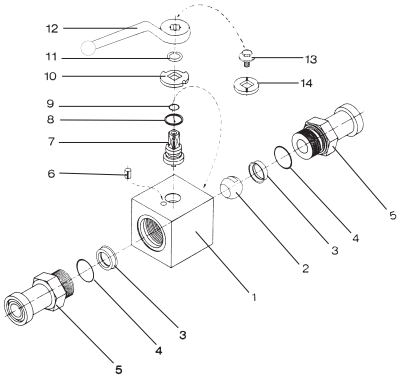

List of Components

No.	Qty.	Description
1	1	Housing
2	1	Ball
3*	2	Seat
4*	2	Connector O-Ring
5	2	Connector
6	1	Stop Pin
7	1	Stem
8*	1	Thrust Ring
9*	1	Stem O-Ring
10	1	Cam Plate
11	1	Snap Ring
12	1	Handle
13	1	Stem Screw
14	1	Flow Indicator

Characteristics

Two-way high-pressure block body ball valves designed for use as on/off devices for hydraulic applications

Standard Construction
- Block body design for in-line assembly
- Supplied with lever

Standard Materials
- Body: Carbon Steel, zinc/iron-plated
- Ball: Carbon Steel, hard chrome-plated
- Stem: Carbon Steel
- Lever: Zinc (STAUFF Size 8)
  Steel (STAUFF Size 12-16)
- Ball seat: Delrin® (POM)
- O-rings: FKM (Viton®)

Standard Connections Styles / Sizes
- 3000 PSI (code 61) SAE split flange connectors
- 6000 PSI (code 62) SAE split flange connectors
- Standard and extended adapter lengths

Pressure Range
- Pressure range: up to 420 bar / 6000 PSI (depending on size and material combination of the ball valve)

Please note: The final maximum working pressure is determined by flange and pipe/tubing rating.

Temperature Range
- Operating temperature range:
  -20 °C ... +100 °C / -4 °F ... + 212 °F

Options / Accessories
- Flanges and flange kits (see catalogue STAUFF Flanges)
- Alternative lever designs/materials (see page 114)
- Locking devices (see pages 115-117)
- Actuator packages (see page 118)
- Limit switches (see page 118)
- Additional assembling threads / holes (see page 119)
- Stainless Steel body
- Stainless Steel ball and stem
- Special ball seat and O-ring materials available for lower/higher temperatures and more aggressive media
- Seal kits (including items marked by * in the above list)

Order Codes

BBV	-	2	-	F3	16	-	0	0	0	1	-	M	-	-
①		②		③	④		⑤	⑥	⑦	⑧		⑨	⑩	⑪

① Type

High-Pressure Block Body Ball Valve	**BBV**

② Number of Ports

Two Ports (Two-Way Ball Valve)	**2**

③ Connection Style

3000 PSI (Code 61) SAE Split Flange Connectors (Standard Adaptor Length)	**F3**
3000 PSI (Code 61) SAE Split Flange Connectors (Extended Adaptor Length)	**F3X**
6000 PSI (code 62) SAE Split Flange Connectors (Standard Adaptor Length)	**F6**
6000 PSI (code 62) SAE Split Flange Connectors (Extended Adaptor Length)	**F6X**

Please contact STAUFF for alternative connection styles.

④ Connection Size

STAUFF Size (according to dimension table)		
08	**12**	**16**

Please contact STAUFF for alternative connection sizes.

⑤ Body Material / Surface Finishing

Carbon Steel, zinc/iron-plated	**0**
Stainless Steel V4A (AISI 316Ti)	**1**

Note: Stainless steel version may vary in dimensions and design.
Alternative materials / surface finishings are available upon request. Contact STAUFF for further information.

⑥ Ball / Stem Material

Ball: Carbon Steel, hard chrome-plated Stem: Carbon Steel	**0**
Ball / Stem: Stainless Steel V4A (AISI 316Ti)	**1**

Alternative materials / surface finishings are available upon request. Contact STAUFF for further information.

⑦ Ball Seat Material

Delrin® (POM)	**0**

Alternative materials are available upon request. Contact STAUFF for further information.

⑧ O-Ring Material

NBR (Buna-N®)	**0**
FKM (Viton®)	**1**

Alternative materials are available upon request. Contact STAUFF for further information.

⑨ Manufacturing Code

Manufacturing code for all connection styles	**M**
Manufacturing code for high-pressure version of 6000 PSI Series (STAUFF Size 16)	**H**

⑩ Lever Options

Supplied with standard lever (according to table)	**—**
Supplied without lever	**0**

Alternative levers can be ordered separately. Please see page 114 for further information.

⑪ Accessories / Options

Supplied without accessories	**—**
Supplied with Locking Device LD1	**LD1**
Supplied with Locking Device LD2	**LD2**

Please see page 115-119 for further information and options.

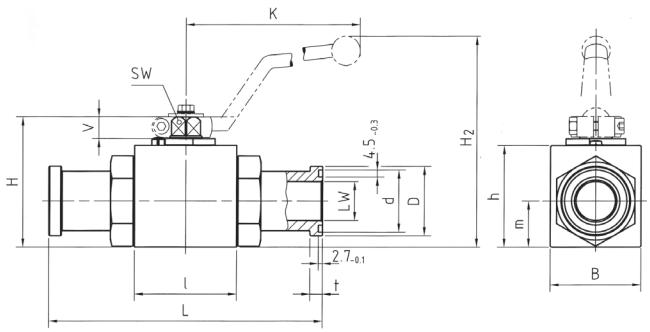

High-Pressure Block Body Ball Valve ▪ Type BBV-2-F3
3000 PSI SAE Split Flange Connection (ISO 6162-1)

When ordering the standard option as indicated in the table below, the following materials will be supplied:

- Body, ball and stem: Carbon Steel
- Lever: Zinc (STAUFF Size 8)
  Steel (STAUFF Size 12-16)
- Ball seat: Delrin® (POM)
- O-rings: FKM (Viton®)

3000 PSI Series (Code 61) ▪ Standard Adaptor Length

STAUFF Size	SAE Flange Size	Nominal Size DN	Dimensions (mm/in) LW	L	l	B	H	h	m	V	SW	K	d[1]	D[2]	t[3]	H2	Nom. Pressure (bar/PSI)	Weight (kg/lbs)	Order Codes (Standard Option)
08	1/2	13	13	151	48	35	54	40	19	11	9	115	25,5	30,2	6,8	89	350	0,85	BBV-2-F308-0001-M
			.51	5.94	1.89	1.38	2.13	1.57	.75	.43	.35	4.53	1.00	1.19	.27	3.50	5000	1.87	
12	3/4	20	19	162	62	49	75	57	24,5	14	14	171	31,9	38,1	6,8	127	350	1,87	BBV-2-F312-0001-M
			.75	6.38	2.44	1.93	2.95	2.24	.96	.55	.55	6.73	1.26	1.50	.27	5	5000	4.11	
16	1	25	25	178	66	58	83	65	29,5	14	14	171	39,8	44,4	8,1	135	320	2,70	BBV-2-F316-0001-M
			.98	7.01	2.60	2.28	3.27	2.56	1.16	.55	.55	6.73	1.57	1.75	.32	5.31	4600	5.94	

Dimensions and design for stainless steel may vary.

3000 PSI Series (Code 61) ▪ Extended Adaptor Length

STAUFF Size	SAE Flange Size	Nominal Size DN	Dimensions (mm/in) LW	L	l	B	H	h	m	V	SW	K	d[1]	D[2]	t[3]	H2	Nom. Pressure (bar/PSI)	Weight (kg/lbs)	Order Codes (Standard Option)
08	1/2	13	13	170	48	35	54	40	19	11	9	115	25,5	30,2	6,8	89	350	0,89	BBV-2-F3X08-0001-M
			.51	6.69	1.89	1.38	2.13	1.57	.75	.43	.35	4.53	1.00	1.19	.27	3.50	5000	1.96	
12	3/4	20	19	200	62	49	75	57	24,5	14	14	171	31,9	38,1	6,8	127	350	2,00	BBV-2-F3X12-0001-M
			.75	7.87	2.44	1.93	2.95	2.24	.96	.55	.55	6.73	1.26	1.50	.27	5	5000	4.40	
16	1	25	25	215	66	58	83	65	29,5	14	14	171	39,8	44,4	8,1	135	320	2,85	BBV-2-F3X16-0001-M
			.98	8.46	2.60	2.28	3.27	2.56	1.16	.55	.55	6.73	1.57	1.75	.32	5.31	4600	6.27	

Please note: The final maximum working pressure is determined by flange and pipe/tubing rating.

[1] Dimension d: ±0,1 mm / .004 in [2] Dimension D: –0,2 mm / .008 in [3] Dimension t: –0,2 mm / .008 in

Dimensions and design for stainless steel may vary.

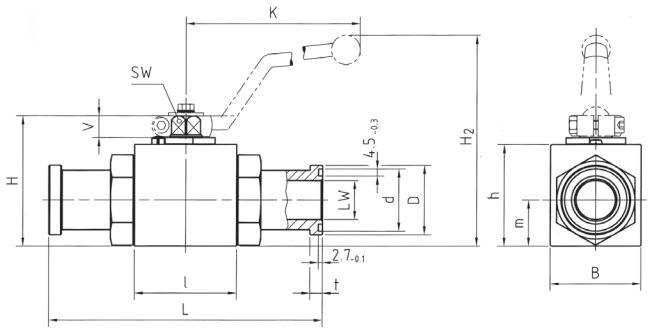

High-Pressure Block Body Ball Valve ▪ Type BBV-2-F6
6000 PSI SAE Split Flange Connection (ISO 6162-2)

When ordering the standard option as indicated in the table below, the following materials will be supplied:

- Body, ball and stem: Carbon Steel
- Lever: Zinc
- Ball seat: Delrin® (POM)
- O-rings: FKM (Viton®)

6000 PSI Series (Code 62) ▪ Standard Adaptor Length

STAUFF Size	SAE Flange Size	Nominal Size DN	Dimensions (mm/in) LW	L	l	B	H	h	m	V	SW	K	d[1]	D[2]	t[3]	H2	Nom. Pressure (bar/PSI)	Weight (kg/lbs)	Order Codes (Standard Option)
08	1/2	13	13	151	48	35	54	40	19	11	9	115	25,5	31,8	7,9	89	420	0,90	BBV-2-F608-0001-M
			.51	5.94	1.89	1.38	2.13	1.57	.75	.43	.35	4.53	1.00	1.25	.31	3.50	6000	1.98	
12	3/4	20	19	174	62	49	75	57	24,5	14	14	171	31,9	41,3	8,9	127	420	1,95	BBV-2-F612-0001-M
			.75	6.85	2.44	1.93	2.95	2.24	.96	.55	.55	6.73	1.26	1.63	.35	5	6000	4.29	
16	1	25	25	198	66	58	83	65	29,5	14	14	171	39,8	47,6	9,6	135	320	3,00	BBV-2-F616-0001-M
			.98	7.80	2.60	2.28	3.27	2.56	1.16	.55	.55	6.73	1.70	1.87	.38	5.31	4600	6.60	
16	1	25	25	206	74	70	88	70	34,5	14	14	171	39,8	47,6	9,6	140	420	3,00	BBV-2-F616-0001-H
			.98	8.11	2.91	2.76	3.46	2.76	1.36	.55	.55	6.73	1.70	1.87	.38	5.51	6000	6.60	

Dimensions and design for stainless steel may vary.

6000 PSI Series (Code 62) ▪ Extended Adaptor Length

STAUFF Size	SAE Flange Size	Nominal Size DN	Dimensions (mm/in) LW	L	l	B	H	h	m	V	SW	K	d[1]	D[2]	t[3]	H2	Nom. Pressure (bar/PSI)	Weight (kg/lbs)	Order Codes (Standard Option)
08	1/2	13	13	180	48	35	54	40	19	11	9	115	25,5	31,8	7,9	89	420	1,00	BBV-2-F6X08-0001-M
			.51	7.09	1.89	1.38	2.13	1.57	.75	.43	.35	4.53	1.00	1.25	.31	3.50	6000	2.20	
12	3/4	20	19	200	62	49	75	57	24,5	14	14	171	31,9	41,3	8,9	127	420	2,10	BBV-2-F6X12-0001-M
			.75	7.87	2.44	1.93	2.95	2.24	.96	.55	.55	6.73	1.26	1.63	.35	5	6000	4.62	
16	1	25	25	250	66	58	83	65	29,5	14	14	171	39,8	47,6	9,6	135	320	3,15	BBV-2-F6X16-0001-M
			.98	9.84	2.60	2.28	3.27	2.56	1.16	.55	.55	6.73	1.70	1.87	.38	5.31	4600	6.93	
16	1	25	25	250	74	70	88	70	34,5	14	14	171	39,8	47,6	9,6	140	420	3,15	BBV-2-F6X16-0001-H
			.98	9.84	2.91	2.76	3.46	2.76	1.36	.55	.55	6.73	1.70	1.87	.38	5.51	6000	6.93	

Please note: The final maximum working pressure is determined by flange and pipe/tubing rating.

[1] Dimension d: ±0,1 mm / .004 in [2] Dimension D: –0,2 mm / .008 in [3] Dimension t: –0,2 mm / .008 in

Dimensions and design for stainless steel may vary.

A

High-Pressure Forged Body Ball Valve ▪ Type FBV-2-F

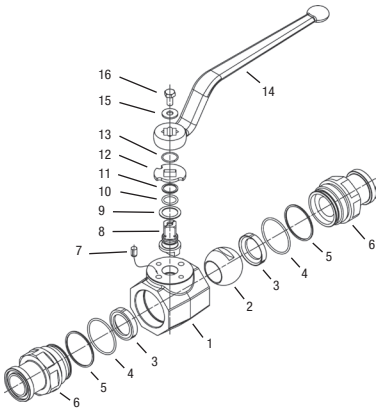

List of Components

No.	Qty.	Description
1	1	Body
2	1	Ball
3*	2	Seat
4*	2	Connector O-Ring
5*	2	Connector Back-Up Ring
6	2	Connector
7	1	Stop Pin
8	1	Stem
9*	1	Thrust Ring
10*	1	Stem O-Ring
11*	1	Stem Back-Up Ring
12	1	Cam Plate
13	1	Snap Ring
14	1	Handle
15	1	Washer
16	1	Stem Bolt

Characteristics

Two-way high-pressure forged body ball valves designed for use as on/off devices for hydraulic applications

Standard Construction
- Forged body design for in-line assembly
- Supplied with off-set lever

Standard Materials
- Body: Carbon Steel, zinc/iron-plated
- Ball: Carbon Steel, hard chrome-plated
- Stem: Carbon Steel
- Lever: Carbon Steel
- Ball seat: Delrin® (POM)
- O-rings: FKM (Viton®)

Standard Connections Styles / Sizes
- 3000 PSI (code 61) SAE split flange connectors
- 6000 PSI (code 62) SAE split flange connectors
- Standard and extended adapter lengths

Pressure Range
- Pressure range: up to 420 bar / 6000 PSI (depending on size and material combination of the ball valve)

Please note: The final maximum working pressure is determined by flange and pipe/tubing rating.

Temperature Range
- Operating temperature range: -20 °C ... +100 °C / -4 °F ... + 212 °F

Options / Accessories
- Flanges and flange kits (see catalogue STAUFF Flanges)
- Alternative lever designs/materials (see page 114)
- Locking devices (see pages 115-117)
- Actuator packages (see page 118)
- Limit switches (see page 118)
- Additional assembling threads / holes (see page 119)
- Stainless Steel body
- Stainless Steel ball and stem
- Special ball seat and O-ring materials available for lower/higher temperatures and more aggressive media
- Seal kits (including items marked by * in the above list)

Order Codes

FBV	-	2	-	F3	20	-	0	0	0	1	-	M	-	-
①		②		③	④		⑤	⑥	⑦	⑧		⑨	⑩	⑪

① Type

High-Pressure Forged Body Ball Valve	**FBV**

② Number of Ports

Two Ports (Two-Way Ball Valve)	**2**

③ Connection Style

3000 PSI (Code 61) SAE Split Flange Connectors (Standard Adaptor Length)	**F3**
3000 PSI (Code 61) SAE Split Flange Connectors (Extended Adaptor Length)	**F3X**
6000 PSI (code 62) SAE Split Flange Connectors (Standard Adaptor Length)	**F6**
6000 PSI (code 62) SAE Split Flange Connectors (Extended Adaptor Length)	**F6X**

Please contact STAUFF for alternative connection styles.

④ Connection Size

STAUFF Size (according to dimension table)

20	**24**	**32**

Please contact STAUFF for alternative connection sizes.

⑤ Body Material / Surface Finishing

Carbon Steel, zinc/iron-plated	**0**
Stainless Steel V4A (AISI 316Ti)	**1**

Note: Stainless steel version may vary in dimensions and design.
Alternative materials / surface finishings are available upon request. Contact STAUFF for further information.

⑥ Ball / Stem Material

Ball: Carbon Steel, hard chrome-plated Stem: Carbon Steel	**0**
Ball / Stem: Stainless Steel V4A (AISI 316Ti)	**1**

Alternative materials / surface finishings are available upon request. Contact STAUFF for further information.

⑦ Ball Seat Material

Delrin® (POM)	**0**

Alternative materials are available upon request. Contact STAUFF for further information.

⑧ O-Ring Material

NBR (Buna-N®)	**0**
FKM (Viton®)	**1**

Alternative materials are available upon request. Contact STAUFF for further information.

⑨ Manufacturing Code

Manufacturing code for all connection styles	**M**

⑩ Lever Options

Supplied with standard lever (according to table)	**—**
Supplied without lever	**0**

Alternative levers can be ordered separately. Please see page 114 for further information.

⑪ Accessories / Options

Supplied without accessories	**—**
Supplied with Locking Device LD1	**LD1**
Supplied with Locking Device LD2	**LD2**
Supplied with Locking Device LD6 (US version)	**LD6**

Please see page 115-119 for further information and options.

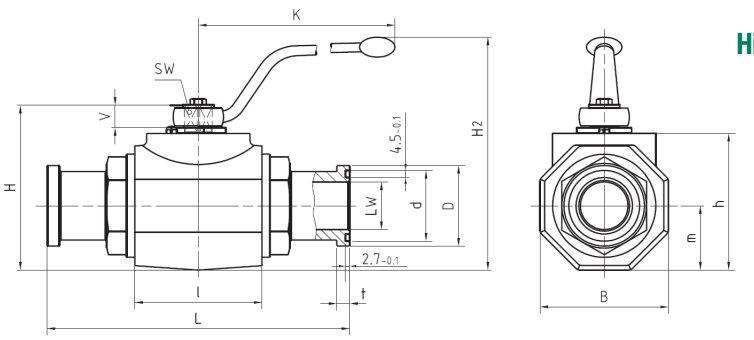

High-Pressure Forged Body Ball Valve ▪ Type FBV-2-F3
3000 PSI SAE Split Flange Connection (ISO 6162-1)

When ordering the standard option as indicated in the table below, the following materials will be supplied:

- Body, ball and stem: Carbon Steel
- Lever: Carbon Steel
- Ball seat: Delrin® (POM)
- O-rings: FKM (Viton®)

3000 PSI Series (Code 61) ▪ Standard Adaptor Length

STAUFF Size	SAE Flange Size	Nominal Size DN	Dimensions (mm/in) LW	L	l	B	H	h	m	V	SW	K	d[1]	D[2]	t[3]	Nom. Pressure (bar/PSI)	Weight (kg/lbs)	Order Codes (Standard Option)
20	1-1/4	32	30	191	80	81	107	86	40,5	16,5	17	306	44,6	50,8	8,1	280	4,22	FBV-2-F320-0001-M
			1.18	7.52	3.15	3.19	4.21	3.39	1.59	.65	.67	12.05	1.76	2.00	.32	4000	9.28	
24	1-1/2	40	38	231	85	100	124	103	50	16,5	17	306	54,1	60,3	8,1	210	6,54	FBV-2-F324-0001-M
			1.50	9.09	3.35	3.94	4.88	4.06	1.97	.65	.67	12.05	2.13	2.37	.32	3000	14.39	
32	2	50	48	232	100	118	138	117	59	16,5	17	306	63,6	71,4	9,6	210	9,29	FBV-2-F332-0001-M
			1.89	9.13	3.94	4.65	5.43	4.61	2.32	.65	.67	12.05	2.50	2.81	.38	3000	20.44	

Dimensions and design for stainless steel may vary.

3000 PSI Series (Code 61) ▪ Extended Adaptor Length

STAUFF Size	SAE Flange Size	Nominal Size DN	Dimensions (mm/in) LW	L	l	B	H	h	m	V	SW	K	d[1]	D[2]	t[3]	Nom. Pressure (bar/PSI)	Weight (kg/lbs)	Order Codes (Standard Option)
20	1-1/4	32	30	275	80	81	107	86	40,5	16,5	17	306	44,6	50,8	8,1	280	5,15	FBV-2-F3X20-0001-M
			1.18	10.83	3.15	3.19	4.21	3.39	1.59	.65	.67	12.05	1.76	2.00	.32	4000	11.33	
24	1-1/2	40	38	320	85	100	124	103	50	16,5	17	306	54,1	60,3	8,1	210	7,20	FBV-2-F3X24-0001-M
			1.50	12.60	3.35	3.94	4.88	4.06	1.97	.65	.67	12.05	2.13	2.37	.32	3000	15.84	
32	2	50	48	323	100	118	138	117	59	16,5	17	306	63,6	71,4	9,6	210	11,50	FBV-2-F3X32-0001-M
			1.89	12.72	3.94	4.65	5.43	4.61	2.32	.65	.67	12.05	2.50	2.81	.38	3000	25.30	

Please note: The final maximum working pressure is determined by flange and pipe/tubing rating.

[1] Dimension d: ±0,1 mm / .004 in
[2] Dimension D: –0,2 mm / .008 in
[3] Dimension t: –0,2 mm / .008 in

Dimensions and design for stainless steel may vary.

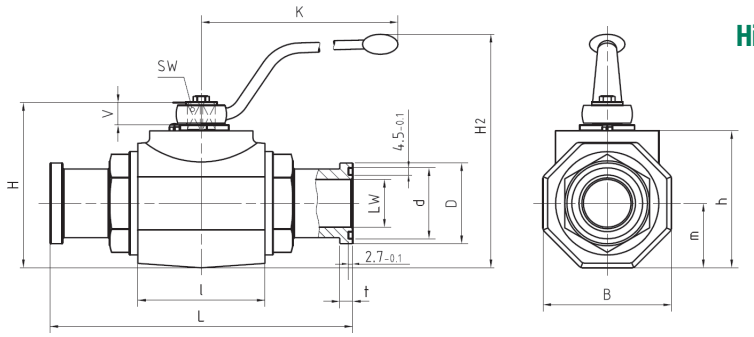

High-Pressure Forged Body Ball Valve ▪ Type FBV-2-F6
6000 PSI SAE Split Flange Connection (ISO 6162-2)

When ordering the standard option as indicated in the table below, the following materials will be supplied:

- Body, ball and stem: Carbon Steel
- Lever: Carbon Steel
- Ball seat: Delrin® (POM)
- O-rings: FKM (Viton®)

6000 PSI Series (Code 62) ▪ Standard Adaptor Length

STAUFF Size	SAE Flange Size	Nominal Size DN	Dimensions (mm/in) LW	L	l	B	H	h	m	V	SW	K	d[1]	D[2]	t[3]	Nom. Pressure (bar/PSI)	Weight (kg/lbs)	Order Codes (Standard Option)
20	1-1/4	32	30	223	80	81	107	86	40,5	16,5	17	306	44,6	54	10,4	420	4,72	FBV-2-F620-0001-M
			1.18	8.78	3.15	3.19	4.21	3.39	1.59	.65	.67	12.05	1.76	2.13	.41	6000	10.38	
24	1-1/2	40	38	281	85	100	124	103	50	16,5	17	306	54,1	63,5	12,7	420	7,49	FBV-2-F624-0001-M
			1.50	11.06	3.35	3.94	4.88	4.06	1.97	.65	.67	12.05	2.13	2.50	.50	6000	16.48	
32	2	50	48	316	100	118	138	117	59	16,5	17	306	63,6	79,4	12,7	420	11,39	FBV-2-F632-0001-M
			1.89	12.44	3.94	4.65	5.43	4.61	2.32	.65	.67	12.05	2.50	3.13	.50	6000	25.06	

Dimensions and design for stainless steel may vary.

6000 PSI Series (Code 62) ▪ Extended Adaptor Length

STAUFF Size	SAE Flange Size	Nominal Size DN	Dimensions (mm/in) LW	L	l	B	H	h	m	V	SW	K	d[1]	D[2]	t[3]	Nom. Pressure (bar/PSI)	Weight (kg/lbs)	Order Codes (Standard Option)
20	1-1/4	32	30	322	80	81	107	86	40,5	16,5	17	306	44,6	54	10,4	420	5,55	FBV-2-F6X20-0001-M
			1.18	12.68	3.15	3.19	4.21	3.39	1.59	.65	.67	12.05	1.76	2.13	.41	6000	12.21	
24	1-1/2	40	38	380	85	100	124	103	50	16,5	17	306	54,1	63,5	12,7	420	7,65	FBV-2-F6X24-0001-M
			1.50	14.96	3.35	3.94	4.88	4.06	1.97	.65	.67	12.05	2.13	2.50	.50	6000	16.83	
32	2	50	48	385	100	118	138	117	59	16,5	17	306	63,6	79,4	12,7	420	12,00	FBV-2-F6X32-0001-M
			1.89	15.16	3.94	4.65	5.43	4.61	2.32	.65	.67	12.05	2.50	3.13	.50	6000	26.40	

Please note: The final maximum working pressure is determined by flange and pipe/tubing rating.

[1] Dimension d: ±0,1 mm / .004 in
[2] Dimension D: –0,2 mm / .008 in
[3] Dimension t: –0,2 mm / .008 in

Dimensions and design for stainless steel may vary.

A

High-Pressure Block Body Ball Valve ▪ Typ BBV-2-F/C

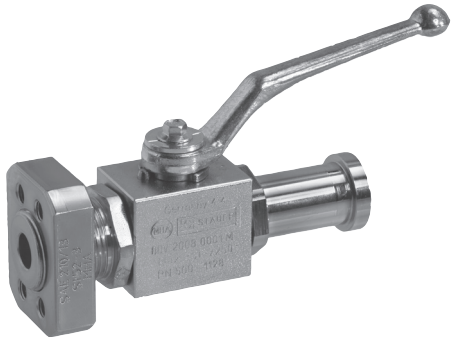

Characteristics

Two-way high-pressure block body ball valves designed for use as on/off devices for hydraulic applications

Standard Construction
- Block body design for in-line assembly
- Supplied with lever

Standard Materials
- Body: Carbon Steel, zinc/iron-plated
- Ball: Carbon Steel, hard chrome-plated
- Stem: Carbon Steel
- Lever: Zinc
- Ball seat: Delrin® (POM)
- O-rings: FKM (Viton®)

Standard Connections Styles / Sizes
- 3000 PSI (code 61) SAE split / mating flange connectors
- 6000 PSI (code 62) SAE split / mating flange connectors
- Metric ISO and unified coarse (UNC) threads

Pressure Range
- Pressure range: up to 420 bar / 6000 PSI (depending on size and material combination of the ball valve)

Please note: The final maximum working pressure is determined by flange and pipe/tubing rating.

Temperature Range
- Operating temperature range: -20 °C ... +100 °C / -4 °F ... + 212 °F

Options / Accessories
- Flanges and flange kits (see catalogue STAUFF Flanges)
- Alternative lever designs/materials (see page 114)
- Locking devices (see pages 115-117)
- Actuator packages (see page 118)
- Limit switches (see page 118)
- Additional assembling threads / holes (see page 119)
- Stainless Steel body
- Stainless Steel ball and stem
- Special ball seat and O-ring materials available for lower/higher temperatures and more aggressive media
- Seal kits

Order Codes

BBV	-	2	-	F/C3	16	M	-	0	0	0	1	-	M	-	-
①		②		③	④	⑤		⑥	⑦	⑧	⑨		⑩	⑪	⑫

① Type

High-Pressure Body Ball Valve	**BBV**

② Number of Ports

Two Ports (Two-Way Ball Valve)	**2**

③ Connection Style

3000 PSI (code 61) SAE Split / Mating Flange Connectors	**F/C3**
6000 PSI (code 62) SAE Split / Mating Flange Connectors	**F/C6**

Please contact STAUFF for alternative connection styles.

④ Connection Size

STAUFF Size (according to dimension table)

08	**12**	**16**

Please contact STAUFF for alternative connection sizes.

⑤ Thread Type

Flange Connection with Metric ISO Threads	**M**
Flange Connection with Unified Coarse (UNC) Threads	**U**

⑥ Body Material / Surface Finishing

Carbon Steel, zinc/iron-plated	**0**
Stainless Steel V4A (AISI 316Ti)	**1**

Note: Stainless steel version may vary in dimensions and design.
Alternative materials / surface finishings are available upon request. Contact STAUFF for further information.

⑦ Ball / Stem Material

Ball: Carbon Steel, hard chrome-plated Stem: Carbon Steel	**0**
Ball / Stem: Stainless Steel V4A (AISI 316Ti)	**1**

Alternative materials / surface finishings are available upon request. Contact STAUFF for further information.

⑧ Ball Seat Material

Delrin® (POM)	**0**

Alternative materials are available upon request. Contact STAUFF for further information.

⑨ O-Ring Material

NBR (Buna-N®)	**0**
FKM (Viton®)	**1**

Alternative materials are available upon request. Contact STAUFF for further information.

⑩ Manufacturing Code

Manufacturing code for all connection styles	**M**
Manufacturing code for high-pressure version of 6000 PSI Series (STAUFF Size 16)	**H**

⑪ Lever Options

Supplied with standard lever (according to table)	**—**
Supplied without lever	**0**

Alternative levers can be ordered separately. Please see page 114 for further information.

⑫ Accessories / Options

Supplied without accessories	**—**
Supplied with Locking Device LD1	**LD1**

Please see page 115-119 for further information and options.

A

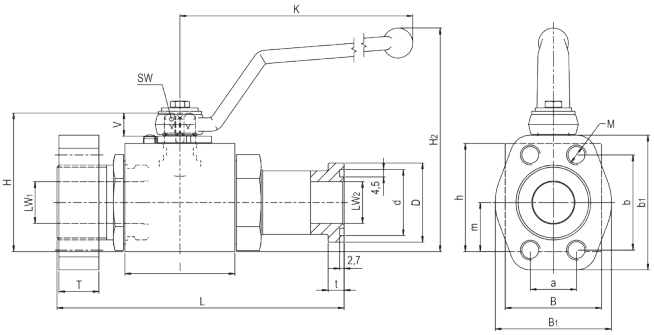

High-Pressure Block Body Ball Valve ▪ Type BBV-2-F/C3
3000 PSI SAE Split / Mating Flange Connection (ISO 6162-1)

When ordering the standard option as indicated in the table below, the following materials will be supplied:

- Body, ball and stem: Carbon Steel
- Lever: Zinc
- Ball seat: Delrin® (POM)
- O-rings: FKM (Viton®)

3000 PSI Series (Code 61) ▪Metric ISO Threads

STAUFF Size	SAE Flange Size	Nominal Size DN	Dimensions (mm/in) LW1	LW2	L	I	B	B1	H	h	m	V	SW	K	d[1]	D[2]	t[3]	T	a	b	b1	M	H2	Nom. Pressure (bar/PSI)	Weight (kg/lbs)	Order Codes (Standard Option)
08	1/2	13	13	13	136	48	35	48	54	40	19	11	9	115	25,5	30,2	6,8	13	17,5	38,1	56	M8	89	350	1,20	BBV-2-F/C308M-0001-M
			.51	.51	5.35	1.89	1.38	1.89	2.13	1.57	.75	.43	.35	4.53	1.00	1.19	.27	.51	.69	1.50	2.20		3.50	5000	2.60	
12	3/4	20	20	19	149	62	49	50	75	57	24,5	14	14	170	31,9	38,1	6,8	14	22,3	47,6	65	M10	127	350	2,50	BBV-2-F/C312M-0001-M
			.79	.75	5.87	2.44	1.93	1.97	2.95	2.24	.96	.55	.55	6.69	1.26	1.50	.27	.55	.88	1.87	2.56		5.00	5000	5.50	
16	1	25	25	25	163	66	58	60	83	65	29,5	14	14	170	39,8	44,4	8,1	16	26,2	52,4	70	M10	135	320	3,50	BBV-2-F/C316M-0001-M
			.98	.98	6.42	2.60	2.28	2.36	3.27	2.56	1.16	.55	.55	6.69	1.57	1.75	.32	.63	1.03	2.06	2.76		5.31	4600	7.70	

Dimensions and design for stainless steel may vary.

3000 PSI Series (Code 61) ▪ Unified Coarse (UNC) Threads

STAUFF Size	SAE Flange Size	Nominal Size DN	Dimensions (mm/in) LW1	LW2	L	I	B	B1	H	h	m	V	SW	K	d[1]	D[2]	t[3]	T	a	b	b1	M	H2	Nom. Pressure (bar/PSI)	Weight (kg/lbs)	Order Codes (Standard Option)
08	1/2	13	13	13	136	48	35	48	54	40	19	11	9	115	25,5	30,2	6,8	13	17,5	38,1	56	5/16–18	89	350	1,20	BBV-2-F/C308U-0001-M
			.51	.51	5.35	1.89	1.38	1.89	2.13	1.57	.75	.43	.35	4.53	1.00	1.19	.27	.51	.69	1.50	2.20	UNC	3.50	5000	2.60	
12	3/4	20	20	19	149	62	49	50	75	57	24,5	14	14	170	31,9	38,1	6,8	14	22,3	47,6	65	3/8–16	127	350	2,50	BBV-2-F/C312U-0001-M
			.79	.75	5.87	2.44	1.93	1.97	2.95	2.24	.96	.55	.55	6.69	1.26	1.50	.27	.55	.88	1.87	2.56	UNC	5.00	5000	5.50	
16	1	25	25	25	163	66	58	60	83	65	29,5	14	14	170	39,8	44,4	8,1	16	26,2	52,4	70	3/8–16	135	320	3,50	BBV-2-F/C316U-0001-M
			.98	.98	6.42	2.60	2.28	2.36	3.27	2.56	1.16	.55	.55	6.69	1.57	1.75	.32	.63	1.03	2.06	2.76	UNC	5.31	4600	7.70	

Please note: The final maximum working pressure is determined by flange and pipe/tubing rating.

[1] Dimension d: ±0,1 mm / .004 in [2] Dimension D: –0,2 mm / .008 in [3] Dimension t: –0,2 mm / .008 in

Dimensions and design for stainless steel may vary.

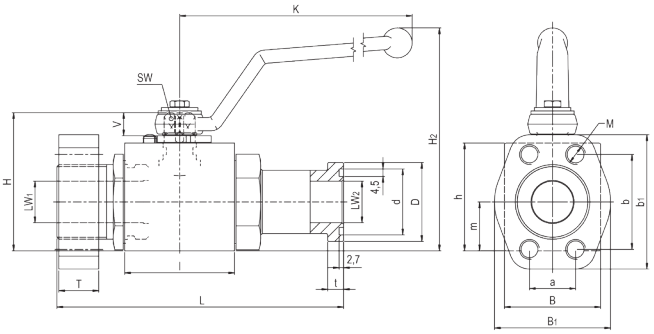

High-Pressure Block Body Ball Valve ▪ Type BBV-2-F/C6
6000 PSI SAE Split / Mating Flange Connection (ISO 6162-2)

When ordering the standard option as indicated in the table below, the following materials will be supplied:

- Body, ball and stem: Carbon Steel
- Lever: Zinc
- Ball seat: Delrin® (POM)
- O-rings: FKM (Viton®)

6000 PSI Series (Code 62) ▪ Metric ISO Threads

STAUFF Size	SAE Flange Size	Nominal Size DN	Dimensions (mm/in) LW1	LW2	L	I	B	B1	H	h	m	V	SW	K	d[1]	D[2]	t[3]	T	a	b	b1	M	H2	Nom. Pressure (bar/PSI)	Weight (kg/lbs)	Order Codes (Standard Option)
08	1/2	13	13	13	136	48	35	48	54	40	19	11	9	115	25,5	31,8	7,9	16	18,2	40,8	56	M8	89	420	1,20	BBV-2-F/C608M-0001-M
			.51	.51	5.35	1.89	1.38	1.89	2.13	1.57	.75	.43	.35	4.53	1.00	1.25	.31	.63	.72	1.61	2.20		3.50	6000	2.64	
12	3/4	20	20	19	155	62	49	60	75	57	24,5	14	14	170	31,9	41,3	8,9	19	23,8	50,8	71	M10	127	420	2,26	BBV-2-F/C612M-0001-M
			.79	.75	6.10	2.44	1.93	2.36	2.95	2.24	.96	.55	.55	6.69	1.26	1.63	.35	.75	.94	2.00	2.80		5.00	6000	4.98	
16	1	25	25	25	173	66	58	70	83	65	29,5	14	14	170	39,8	47,6	9,6	24	27,8	57,2	71	M12	135	320	3,75	BBV-2-F/C616M-0001-M
			.98	.98	6.81	2.60	2.28	2.76	3.27	2.56	1.16	.55	.55	6.69	1.57	1.87	.38	.94	1.09	2.25	2.80		5.31	4600	8.26	
16	1	25	25	25	181	74	70	70	88	70	34,5	14	14	170	39,8	47,6	9,6	24	27,8	57,2	81	M12	140	420	4,10	BBV-2-F/C616M-0001-H
			.98	.98	7.13	2.91	2.76	2.76	3.46	2.76	1.36	.55	.55	6.69	1.57	1.87	.38	.94	1.09	2.25	3.19		5.51	6000	9.04	

Dimensions and design for stainless steel may vary.

6000 PSI Series (Code 62) ▪ Unified Coarse (UNC) Threads

STAUFF Size	SAE Flange Size	Nominal Size DN	Dimensions (mm/in) LW1	LW2	L	I	B	B1	H	h	m	V	SW	K	d[1]	D[2]	t[3]	T	a	b	b1	M	H2	Nom. Pressure (bar/PSI)	Weight (kg/lbs)	Order Codes (Standard Option)
08	1/2	13	13	13	136	48	35	48	54	40	19	11	9	115	25,5	31,8	7,9	16	18,2	40,8	56	5/16–18	89	420	1,20	BBV-2-F/C608U-0001-M
			.51	.51	5.35	1.89	1.38	1.89	2.13	1.57	.75	.43	.35	4.53	1.00	1.25	.31	.63	.72	1.61	2.20	UNC	3.50	6000	2.64	
12	3/4	20	20	19	155	62	49	60	75	57	24,5	14	14	170	31,9	41,3	8,9	19	23,8	50,8	71	3/8–16	127	420	2,26	BBV-2-F/C612U-0001-M
			.79	.75	6.10	2.44	1.93	2.36	2.95	2.24	.96	.55	.55	6.69	1.26	1.63	.35	.75	.94	2.00	2.80	UNC	5.00	6000	4.98	
16	1	25	25	25	173	66	58	70	83	65	29,5	14	14	170	39,8	47,6	9,6	24	27,8	57,2	71	7/16–14	135	320	3,75	BBV-2-F/C616U-0001-M
			.98	.98	6.81	2.60	2.28	2.76	3.27	2.56	1.16	.55	.55	6.69	1.57	1.87	.38	.94	1.09	2.25	2.80	UNC	5.31	4600	8.26	
16	1	25	25	25	181	74	70	70	88	70	34,5	14	14	170	39,8	47,6	9,6	24	27,8	57,2	81	7/16–14	140	420	4,10	BBV-2-F/C616U -0001-H
			.98	.98	7.13	2.91	2.76	2.76	3.46	2.76	1.36	.55	.55	6.69	1.57	1.87	.38	.94	1.09	2.25	3.19	UNC	5.51	6000	9.04	

Please note: The final maximum working pressure is determined by flange and pipe/tubing rating.

[1] Dimension d: ±0,1 mm / .004 in [2] Dimension D: –0,2 mm / .008 in [3] Dimension t: –0,2 mm / .008 in

Dimensions and design for stainless steel may vary.

A

High-Pressure Forged Body Ball Valve ▪ Typ FBV-2-F/C

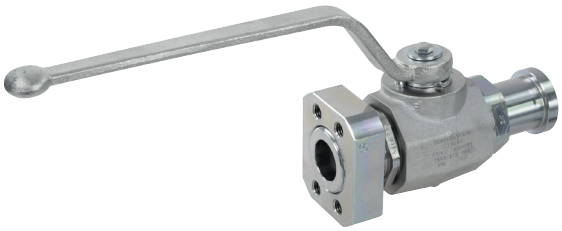

Characteristics

Two-way high-pressure forged body ball valves designed for use as on/off devices for hydraulic applications

Standard Construction
- Forged body design for in-line assembly
- Supplied with off-set lever

Standard Materials
- Body: Carbon Steel, zinc/iron-plated
- Ball: Carbon Steel, hard chrome-plated
- Stem: Carbon Steel
- Lever: Carbon Steel
- Ball seat: Delrin® (POM)
- O-rings: FKM (Viton®)

Standard Connections Styles / Sizes
- 3000 PSI (code 61) SAE split / mating flange connectors
- 6000 PSI (code 62) SAE split / mating flange connectors
- Metric ISO and unified coarse (UNC) threads

Pressure Range
- Pressure range: up to 420 bar / 6000 PSI (depending on size and material combination of the ball valve)

Please note: The final maximum working pressure is determined by flange and pipe/tubing rating.

Temperature Range
- Operating temperature range: -20 °C ... +100 °C / -4 °F ... + 212 °F

Options / Accessories
- Flanges and flange kits (see catalogue STAUFF Flanges)
- Alternative lever designs/materials (see page 114)
- Locking devices (see pages 115-117)
- Actuator packages (see page 118)
- Limit switches (see page 118)
- Additional assembling threads / holes (see page 119)
- Stainless Steel body
- Stainless Steel ball and stem
- Special ball seat and O-ring materials available for lower/higher temperatures and more aggressive media
- Seal kits

Order Codes

FBV	-	2	-	F/C3	24	M	-	0	0	0	1	-	M	-	-
①		②		③	④	⑤		⑥	⑦	⑧	⑨		⑩	⑪	⑫

① Type

High-Pressure Forged Body Ball Valve	**FBV**

② Number of Ports

Two Ports (Two-Way Ball Valve)	**2**

③ Connection Style

3000 PSI (code 61) SAE Split / Mating Flange Connectors	**F/C3**
6000 PSI (code 62) SAE Split / Mating Flange Connectors	**F/C6**

Please contact STAUFF for alternative connection styles.

④ Connection Size

STAUFF Size (according to dimension table)

20	**24**	**32**

Please contact STAUFF for alternative connection sizes.

⑤ Thread Type

Flange Connection with Metric ISO Threads	**M**
Flange Connection with Unified Coarse (UNC) Threads	**U**

⑥ Body Material / Surface Finishing

Carbon Steel, zinc/iron-plated	**0**
Stainless Steel V4A (AISI 316Ti)	**1**

Note: Stainless steel version may vary in dimensions and design.
Alternative materials / surface finishings are available upon request. Contact STAUFF for further information.

⑦ Ball / Stem Material

Ball: Carbon Steel, hard chrome-plated Stem: Carbon Steel	**0**
Ball / Stem: Stainless Steel V4A (AISI 316Ti)	**1**

Alternative materials / surface finishings are available upon request. Contact STAUFF for further information.

⑧ Ball Seat Material

Delrin® (POM)	**0**

Alternative materials are available upon request. Contact STAUFF for further information.

⑨ O-Ring Material

NBR (Buna-N®)	**0**
FKM (Viton®)	**1**

Alternative materials are available upon request. Contact STAUFF for further information.

⑩ Manufacturing Code

Manufacturing code for all connection styles	**M**

⑪ Lever Options

Supplied with standard lever (according to table)	**—**
Supplied without lever	**0**

Alternative levers can be ordered separately. Please see page 114 for further information.

⑫ Accessories / Options

Supplied without accessories	**—**
Supplied with Locking Device LD1	**LD1**

Please see page 115-119 for further information and options.

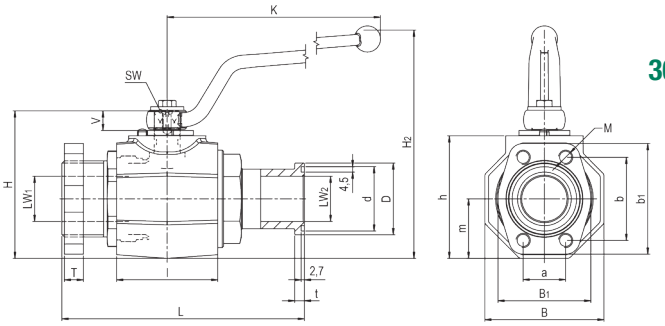

High-Pressure Forged Body Ball Valve ▪ Type FBV-2-F/C3
3000 PSI SAE Split / Mating Flange Connection (ISO 6162-1)

When ordering the standard option as indicated in the table below, the following materials will be supplied:

- Body, ball and stem: Carbon Steel
- Lever: Carbon Steel
- Ball seat: Delrin® (POM)
- O-rings: FKM (Viton®)

3000 PSI Series (Code 61) ▪ Metric ISO Threads

STAUFF Size	SAE Flange Size	Nominal Size DN	Dimensions (mm/in) LW1	LW2	L	I	B	B1	H	h	m	V	SW	K	d[1]	D[2]	t[3]	T	a	b	b1	M	H2	Nom. Pressure (bar/PSI)	Weight (kg/lbs)	Order Codes (Standard Option)
20	1-1/4	32	32	30	181	80	81	68	107	86	40,5	16,5	17	306	44,6	50,8	8,1	16	30,2	58,7	79	M10	171	280	5,87	FBV-2-F/C320M-0001-M
			1.26	1.18	7.13	3.15	3.19	2.68	4.21	3.39	1.59	.65	.67	12.05	1.76	2.00	.32	.63	1.19	2.31	3.11		6.73	4000	12.94	
24	1-1/2	40	38	38	204	85	100	78	124	103	50	16,5	17	306	54,1	60,3	8,1	16	35,7	69,9	93	M12	188	210	8,82	FBV-2-F/C324M-0001-M
			1.50	1.50	8.03	3.35	3.94	3.07	4.88	4.06	1.97	.65	.67	12.05	2.13	2.37	.32	.63	1.41	2.75	3.66		7.40	3000	19.45	
32	2	50	48	48	214	100	118	90	138	117	59	16,5	17	306	63,6	71,4	9,6	16	42,9	77,8	102	M12	202	210	14,29	FBV-2-F/C332M-0001-M
			1.89	1.89	8.43	3.94	4.65	3.54	5.43	4.61	2.32	.65	.67	12.05	2.50	2.81	.38	.63	1.69	3.06	4.02		7.95	3000	31.50	

Dimensions and design for stainless steel may vary.

3000 PSI Series (Code 61) ▪ Unified Coarse (UNC) Threads

STAUFF Size	SAE Flange Size	Nominal Size DN	Dimensions (mm/in) LW1	LW2	L	I	B	B1	H	h	m	V	SW	K	d[1]	D[2]	t[3]	T	a	b	b1	M	H2	Nom. Pressure (bar/PSI)	Weight (kg/lbs)	Order Codes (Standard Option)
20	1-1/4	32	32	30	181	80	81	68	107	86	40,5	16,5	17	306	44,6	50,8	8,1	16	30,2	58,7	79	7/16–14	171	280	5,87	FBV-2-F/C320U-0001-M
			1.26	1.18	7.13	3.15	3.19	2.68	4.21	3.39	1.59	.65	.67	12.05	1.76	2.00	.32	.63	1.19	2.31	3.11	UNC	6.73	4000	12.94	
24	1-1/2	40	38	38	204	85	100	78	124	103	50	16,5	17	306	54,1	60,3	8,1	16	35,7	69,9	93	1/2–13	188	210	8,82	FBV-2-F/C324U-0001-M
			1.50	1.50	8.03	3.35	3.94	3.07	4.88	4.06	1.97	.65	.67	12.05	2.13	2.37	.32	.63	1.41	2.75	3.66	UNC	7.40	3000	19.45	
32	2	50	48	48	214	100	118	90	138	117	59	16,5	17	306	63,6	71,4	9,6	16	42,9	77,8	102	1/2–13	202	210	14,29	FBV-2-F/C332U-0001-M
			1.89	1.89	8.43	3.94	4.65	3.54	5.43	4.61	2.32	.65	.67	12.05	2.50	2.81	.38	.63	1.69	3.06	4.02	UNC	7.95	3000	31.50	

Please note: The final maximum working pressure is determined by flange and pipe/tubing rating.

[1] Dimension d: ±0,1 mm / .004 in [2] Dimension D: –0,2 mm / .008 in [3] Dimension t: –0,2 mm / .008 in

Dimensions and design for stainless steel may vary.

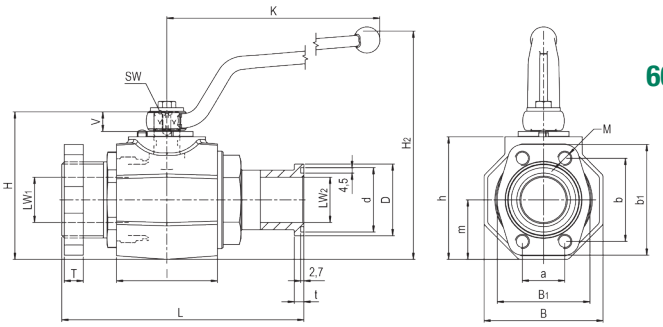

High-Pressure Forged Body Ball Valve ▪ Type FBV-2-F/C6
6000 PSI SAE Split / Mating Flange Connection (ISO 6162-2)

When ordering the standard option as indicated in the table below, the following materials will be supplied:

- Body, ball and stem: Carbon Steel
- Lever: Carbon Steel
- Ball seat: Delrin® (POM)
- O-rings: FKM (Viton®)

6000 PSI Series (Code 62) ▪ Metric ISO Threads

STAUFF Size	SAE Flange Size	Nominal Size DN	Dimensions (mm/in) LW1	LW2	L	I	B	B1	H	h	m	V	SW	K	d[1]	D[2]	t[3]	T	a	b	b1	M	H2	Nom. Pressure (bar/PSI)	Weight (kg/lbs)	Order Codes (Standard Option)
20	1-1/4	32	32	30	189	80	81	78	107	86	40,5	16,5	17	306	44,6	54	10,4	27	31,8	66,6	95	M12	171	420	6,12	FBV-2-F/C620M-0001-M
			1.26	1.18	7.44	3.15	3.19	3.07	4.21	3.39	1.59	.65	.67	12.05	1.76	2.13	.41	1.06	1.24	2.62	3.74		6.73	6000	13.49	
20	1-1/4	32	32	30	189	80	81	78	107	86	40,5	16,5	17	306	44,6	54	10,4	27	31,8	66,6	95	M14	171	420	6,12	FBV-2-F/C620M14-0001-M
			1.26	1.18	7.44	3.15	3.19	3.07	4.21	3.39	1.59	.65	.67	12.05	1.76	2.13	.41	1.06	1.24	2.62	3.74		6.73	6000	13.49	
24	1-1/2	40	38	38	229	85	100	94	124	103	50	16,5	17	306	54,1	63,5	12,7	30	36,5	79,3	112	M16	188	420	9,29	FBV-2-F/C624M-0001-M
			1.50	1.50	9.02	3.35	3.94	3.82	4.88	4.06	1.97	.65	.67	12.05	2.13	2.50	.50	1.18	1.44	3.12	4.41		7.40	6000	20.48	
32	2	50	48	48	256	100	118	114	138	117	59	16,5	17	306	63,6	79,4	12,7	35	44,5	96,3	134	M20	202	420	15,34	FBV-2-F/C632M-0001-M
			1.89	1.89	10.08	3.94	4.65	4.49	5.43	4.61	2.32	.65	.67	12.05	2.50	3.13	.50	1.38	1.75	3.79	5.28		7.95	6000	33.82	

Dimensions and design for stainless steel may vary.

6000 PSI Series (Code 62) ▪ Unified Coarse (UNC) Threads

STAUFF Size	SAE Flange Size	Nominal Size DN	Dimensions (mm/in) LW1	LW2	L	I	B	B1	H	h	m	V	SW	K	d[1]	D[2]	t[3]	T	a	b	b1	M	H2	Nom. Pressure (bar/PSI)	Weight (kg/lbs)	Order Codes (Standard Option)
20	1-1/4	32	32	30	189	80	81	78	107	86	40,5	16,5	17	306	44,6	54	10,4	27	31,8	66,6	95	1/2–13	171	420	6,12	FBV-2-F/C620U-0001-M
			1.26	1.18	7.44	3.15	3.19	3.07	4.21	3.39	1.59	.65	.67	12.05	1.76	2.13	.41	1.06	1.24	2.62	3.74	UNC	6.73	6000	13.49	
24	1-1/2	40	38	38	229	85	100	94	124	103	50	16,5	17	306	54,1	63,5	12,7	30	36,5	79,3	112	5/8–11	188	420	9,29	FBV-2-F/C624U-0001-M
			1.50	1.50	9.02	3.35	3.94	3.82	4.88	4.06	1.97	.65	.67	12.05	2.13	2.50	.50	1.18	1.44	3.12	4.41	UNC	7.40	6000	20.48	
32	2	50	48	48	256	100	118	114	138	117	59	16,5	17	306	63,6	79,4	12,7	35	44,5	96,3	134	3/4–10	202	420	15,34	FBV-2-F/C632U-0001-M
			1.89	1.89	10.08	3.94	4.65	4.49	5.43	4.61	2.32	.65	.67	12.05	2.50	3.13	.50	1.38	1.75	3.79	5.28	UNC	7.95	6000	33.82	

Please note: The final maximum working pressure is determined by flange and pipe/tubing rating.

[1] Dimension d: ±0,1 mm / .004 in [2] Dimension D: –0,2 mm / .008 in [3] Dimension t: –0,2 mm / .008 in

Dimensions and design for stainless steel may vary.

A

High-Pressure Block Body Ball Valve ▪ Type BBV-2-C

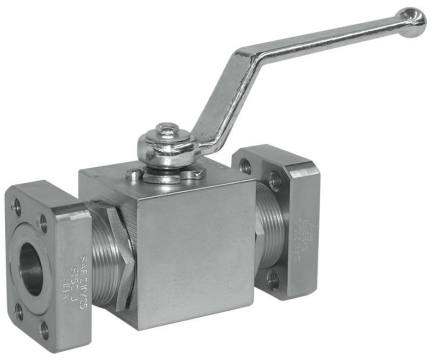

Characteristics

Two-way high-pressure block body ball valves designed for use as on/off devices for hydraulic applications

Standard Construction
- Block body design for in-line assembly
- Supplied with off-set lever

Standard Materials
- Body: Carbon Steel, zinc/iron-plated
- Ball: Carbon Steel, hard chrome-plated
- Stem: Carbon Steel
- Lever: Zinc (STAUFF Size 08)
  Carbon Steel (STAUFF Sizes 12 and 16)
- Ball seat: Delrin® (POM)
- O-rings: FKM (Viton®)

Standard Connections Styles / Sizes
- 3000 PSI (code 61) SAE mating flange connectors
- 6000 PSI (code 62) SAE mating flange connectors
- Metric ISO and unified coarse (UNC) threads

Pressure Range
- Pressure range: up to 420 bar / 6000 PSI (depending on size and material combination of the ball valve)

Please note: The final maximum working pressure is determined by flange and pipe/tubing rating.

Temperature Range
- Operating temperature range:
  -20 °C ... +100 °C / -4 °F ... + 212 °F

Options / Accessories
- Flanges and flange kits (see catalogue STAUFF Flanges)
- Alternative lever designs/materials (see page 114)
- Locking devices (see pages 115-117)
- Actuator packages (see page 118)
- Limit switches (see page 118)
- Additional assembling threads / holes (see page 119)
- Stainless Steel body
- Stainless Steel ball and stem
- Special ball seat and O-ring materials available for lower/higher temperatures and more aggressive media
- Seal kits

Order Codes

BBV	-	2	-	C3	16	M	-	0	0	0	1	-	M	-	-
①		②		③	④	⑤		⑥	⑦	⑧	⑨		⑩	⑪	⑫

① Type

High-Pressure Body Ball Valve	**BBV**

② Number of Ports

Two Ports (Two-Way Ball Valve)	**2**

③ Connection Style

3000 PSI (code 61) SAE Mating Flange Connectors	**C3**
6000 PSI (code 62) SAE Mating Flange Connectors	**C6**

Please contact STAUFF for alternative connection styles.

④ Connection Size

STAUFF Size (according to dimension table)		
08	**12**	**16**

Please contact STAUFF for alternative connection sizes.

⑤ Thread Type

Flange Connection with Metric ISO Threads	**M**
Flange Connection with Unified Coarse (UNC) Threads	**U**

⑥ Body Material / Surface Finishing

Carbon Steel, zinc/iron-plated	**0**
Stainless Steel V4A (AISI 316Ti)	**1**

Note: Stainless steel version may vary in dimensions and design.
Alternative materials / surface finishings are available upon request. Contact STAUFF for further information.

⑦ Ball / Stem Material

Ball: Carbon Steel, hard chrome-plated Stem: Carbon Steel	**0**
Ball / Stem: Stainless Steel V4A (AISI 316Ti)	**1**

Alternative materials / surface finishings are available upon request. Contact STAUFF for further information.

⑧ Ball Seat Material

Delrin® (POM)	**0**

Alternative materials are available upon request. Contact STAUFF for further information.

⑨ O-Ring Material

NBR (Buna-N®)	**0**
FKM (Viton®)	**1**

Alternative materials are available upon request. Contact STAUFF for further information.

⑩ Manufacturing Code

Manufacturing code for all connection styles	**M**
Manufacturing code for high-pressure version of 6000 PSI Series (STAUFF Size 16)	**H**

⑪ Lever Options

Supplied with standard lever (according to table)	**—**
Supplied without lever	**0**

Alternative levers can be ordered separately. Please see page 114 for further information.

⑫ Accessories / Options

Supplied without accessories	**—**
Supplied with Locking Device LD1	**LD1**

Please see page 115-119 for further information and options.

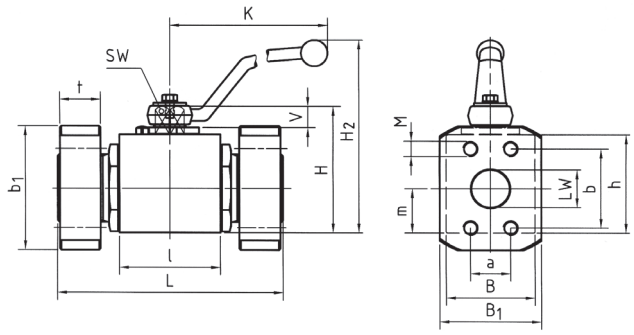

High-Pressure Block Body Ball Valve ▪ Type BBV-2-C3
3000 PSI SAE Flange Connection (ISO 6162-1)

When ordering the standard option as indicated in the table below, the following materials will be supplied:

- Body, ball and stem: Carbon Steel
- Lever: Zinc (STAUFF Size 08)
  Carbon Steel (STAUFF Sizes 12 and 16)
- Ball seat: Delrin® (POM)
- O-rings: FKM (Viton®)

3000 PSI Series (Code 61) ▪ Metric ISO Threads

STAUFF Size	SAE Flange Size	Nominal Size DN	Dimensions (mm/in) LW	L	l	B	H	h	m	V	SW	K	B1	b1	t	a	b	M	H2	Nom. Pressure (bar/PSI)	Weight (kg/lbs)	Order Codes (Standard Option)
08	1/2	13	13	120	48	35	54	40	19	11	9	115	48	56	13	17,5	38,1	M8	89	350	1,50	BBV-2-C308M-0001-M
			.51	4.72	1.89	1.38	2.13	1.57	.75	.43	.35	4.53	1.89	2.20	.51	.69	1.50		3.50	5000	3.30	
12	3/4	20	20	136	62	49	75	57	24,5	14	14	170	50	65	14	22,3	47,6	M10	127	350	3,00	BBV-2-C312M-0001-M
			.79	5.35	2.44	1.93	2.95	2.24	.96	.55	.55	6.69	1.97	2.56	.55	.88	1.87		5.00	5000	6.60	
16	1	25	25	148	66	58	83	65	29,5	14	14	170	60	70	16	26,2	52,4	M10	135	320	4,50	BBV-2-C316M-0001-M
			.98	5.83	2.60	2.28	3.27	2.56	1.16	.55	.55	6.69	2.36	2.76	.63	1.03	2.06		5.31	4600	9.90	

Dimensions and design for stainless steel may vary.

3000 PSI Series (Code 61) ▪ Unified Coarse (UNC) Threads

STAUFF Size	SAE Flange Size	Nominal Size DN	Dimensions (mm/in) LW	L	l	B	H	h	m	V	SW	K	B1	b1	t	a	b	M	H2	Nom. Pressure (bar/PSI)	Weight (kg/lbs)	Order Codes (Standard Option)
08	1/2	13	13	120	48	35	54	40	19	11	9	115	48	56	13	17,5	38,1	5/16–18	89	350	1,50	BBV-2-C308U-0001-M
			.51	4.72	1.89	1.38	2.13	1.57	.75	.43	.35	4.53	1.89	2.20	.51	.69	1.50	UNC	3.50	5000	3.30	
12	3/4	20	20	136	62	49	75	57	24,5	14	14	170	50	65	14	22,3	47,6	3/8–16	127	350	3,00	BBV-2-C312U-0001-M
			.79	5.35	2.44	1.93	2.95	2.24	.96	.55	.55	6.69	1.97	2.56	.55	.88	1.87	UNC	5.00	5000	6.60	
16	1	25	25	148	66	58	83	65	29,5	14	14	170	60	70	16	26,2	52,4	3/8–16	135	320	4,50	BBV-2-C316U-0001-M
			.98	5.83	2.60	2.28	3.27	2.56	1.16	.55	.55	6.69	2.36	2.76	.63	1.03	2.06	UNC	5.31	4600	9.90	

Please note: The final maximum working pressure is determined by flange and pipe/tubing rating.
Dimensions and design for stainless steel may vary.

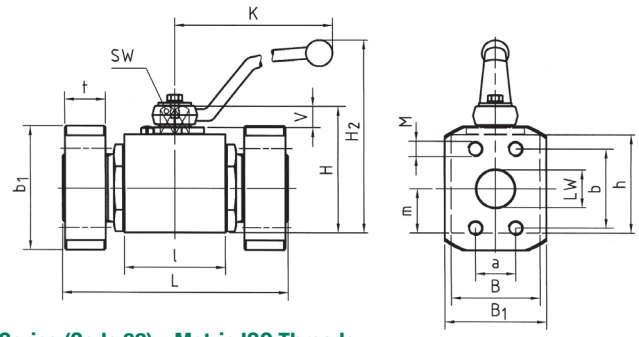

High-Pressure Block Body Ball Valve ▪ Type BBV-2-C6
6000 PSI SAE Flange Connection (ISO 6162-2)

When ordering the standard option as indicated in the table below, the following materials will be supplied:

- Body, ball and stem: Carbon Steel
- Lever: Zinc (STAUFF Size 08)
  Carbon Steel (STAUFF Sizes 12 and 16)
- Ball seat: Delrin® (POM)
- O-rings: FKM (Viton®)

6000 PSI Series (Code 62) ▪ Metric ISO Threads

STAUFF Size	SAE Flange Size	Nominal Size DN	Dimensions (mm/in) LW	L	l	B	H	h	m	V	SW	K	B1	b1	t	a	b	M	H2	Nom. Pressure (bar/PSI)	Weight (kg/lbs)	Order Codes (Standard Option)
08	1/2	13	13	120	48	35	54	40	19	11	9	115	48	56	16	18,2	40,5	M8	89	420	1,50	BBV-2-C608M-0001-M
			.51	4.72	1.89	1.38	2.13	1.57	.75	.43	.35	4.53	1.89	2.20	.63	.72	1.59		3,50	6000	3.30	
12	3/4	20	20	136	62	49	75	57	24,5	14	14	170	60	71	19	23,8	50,8	M10	127	420	3,00	BBV-2-C612M-0001-M
			.79	5.35	2.44	1.93	2.95	2.24	.96	.55	.55	6.69	2.36	2.80	.75	.94	2.00		5,00	6000	6.60	
16	1	25	25	148	66	58	83	65	29,5	14	14	170	70	81	24	27,8	57,2	M12	135	320	3,80	BBV-2-C616M-0001-M
			.98	5.83	2.60	2.28	3.27	2.56	1.16	.55	.55	6.69	2.76	3.19	.94	1.09	2.25		5,31	4600	8.37	
16	1	25	25	156	74	70	88	70	34,5	14	14	170	70	81	24	27,8	57,2	M12	140	420	4,50	BBV-2-C616M-0001-H
			.98	6.14	2.91	2.76	3.46	2.76	1.36	.55	.55	6.69	2.76	3.19	.94	1.09	2.25		5.51	6000	9.90	

Dimensions and design for stainless steel may vary.

6000 PSI Series (Code 62) ▪ Unified Coarse (UNC) Threads

STAUFF Size	SAE Flange Size	Nominal Size DN	Dimensions (mm/in) LW	L	l	B	H	h	m	V	SW	K	B1	b1	t	a	b	M	H2	Nom. Pressure (bar/PSI)	Weight (kg/lbs)	Order Codes (Standard Option)
08	1/2	13	13	120	48	35	54	40	19	11	9	115	48	56	16	18,2	40,5	5/16–18	89	420	1,50	BBV-2-C608U-0001-M
			.51	4.72	1.89	1.38	2.13	1.57	.75	.43	.35	4.53	1.89	2.20	.63	.72	1.59	UNC	3,50	6000	3.30	
12	3/4	20	20	136	62	49	75	57	24,5	14	14	170	60	71	19	23,8	50,8	3/8–16	127	420	3,00	BBV-2-C612U-0001-M
			.79	5.35	2.44	1.93	2.95	2.24	.96	.55	.55	6.69	2.36	2.80	.75	.94	2.00	UNC	5,00	6000	6.60	
16	1	25	25	148	66	58	83	65	29,5	14	14	170	70	81	24	27,8	57,2	7/16–14	135	320	3,80	BBV-2-C616U-0001-M
			.98	5.83	2.60	2.28	3.27	2.56	1.16	.55	.55	6.69	2.76	3.19	.94	1.09	2.25	UNC	5,31	4600	8.37	
16	1	25	25	156	74	70	88	70	34,5	14	14	170	70	81	24	27,8	57,2	7/16–14	140	420	4,50	BBV-2-C616U-0001-H
			.98	6.14	2.91	2.76	3.46	2.76	1.36	.55	.55	6.69	2.76	3.19	.94	1.09	2.25	UNC	5.51	6000	9.90	

Please note: The final maximum working pressure is determined by flange and pipe/tubing rating.
Dimensions and design for stainless steel may vary.

A

High-Pressure Forged Body Ball Valve ▪ Type FBV-2-C

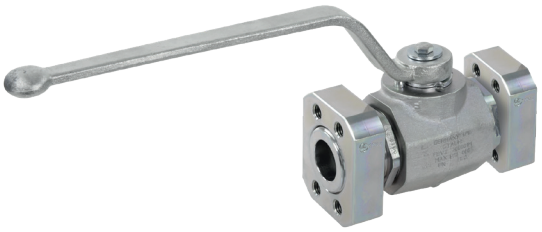

Characteristics

Two-way high-pressure forged body ball valves designed for use as on/off devices for hydraulic applications

Standard Construction
- Forged body design for in-line assembly
- Supplied with off-set lever

Standard Materials
- Body: Carbon Steel, zinc/iron-plated
- Ball: Carbon Steel, hard chrome-plated
- Stem: Carbon Steel
- Lever: Carbon Steel
- Ball seat: Delrin® (POM)
- O-rings: FKM (Viton®)

Standard Connections Styles / Sizes
- 3000 PSI (code 61) SAE mating flange connectors
- 6000 PSI (code 62) SAE mating flange connectors
- Metric ISO and unified coarse (UNC) threads

Pressure Range
- Pressure range: up to 420 bar / 6000 PSI (depending on size and material combination of the ball valve)

Please note: The final maximum working pressure is determined by flange and pipe/tubing rating.

Temperature Range
- Operating temperature range: -20 °C ... +100 °C / -4 °F ... + 212 °F

Options / Accessories
- Flanges and flange kits (see catalogue STAUFF Flanges)
- Alternative lever designs/materials (see page 114)
- Locking devices (see pages 115-117)
- Actuator packages (see page 118)
- Limit switches (see page 118)
- Additional assembling threads / holes (see page 119)
- Stainless Steel body
- Stainless Steel ball and stem
- Special ball seat and O-ring materials available for lower/higher temperatures and more aggressive media
- Seal kits

Order Codes

FBV	-	2	-	C3	20	M	-	0	0	0	1	-	M	-	-
①		②		③	④	⑤		⑥	⑦	⑧	⑨		⑩	⑪	⑫

① Type

High-Pressure Forged Body Ball Valve	**FBV**

② Number of Ports

Two Ports (Two-Way Ball Valve)	**2**

③ Connection Style

3000 PSI (code 61) SAE Mating Flange Connectors	**C3**
6000 PSI (code 62) SAE Mating Flange Connectors	**C6**

Please contact STAUFF for alternative connection styles.

④ Connection Size

STAUFF Size (according to dimension table)

20	**24**	**32**	**40R**

Please contact STAUFF for alternative connection sizes.

⑤ Thread Type

Flange Connection with Metric ISO Threads	**M**
Flange Connection with Unified Coarse (UNC) Threads	**U**

⑥ Body Material / Surface Finishing

Carbon Steel, zinc/iron-plated	**0**
Stainless Steel V4A (AISI 316Ti)	**1**

Note: Stainless steel version may vary in dimensions and design.
Alternative materials / surface finishings are available upon request. Contact STAUFF for further information.

⑦ Ball / Stem Material

Ball: Carbon Steel, hard chrome-plated Stem: Carbon Steel	**0**
Ball / Stem: Stainless Steel V4A (AISI 316Ti)	**1**

Alternative materials / surface finishings are available upon request. Contact STAUFF for further information.

⑧ Ball Seat Material

Delrin® (POM)	**0**

Alternative materials are available upon request. Contact STAUFF for further information.

⑨ O-Ring Material

NBR (Buna-N®)	**0**
FKM (Viton®)	**1**

Alternative materials are available upon request. Contact STAUFF for further information.

⑩ Manufacturing Code

Manufacturing code for all connection styles	**M**

⑪ Lever Options

Supplied with standard lever (according to table)	**—**
Supplied without lever	**0**

Alternative levers can be ordered separately. Please see page 114 for further information.

⑫ Accessories / Options

Supplied without accessories	**—**
Supplied with Locking Device LD1	**LD1**
Supplied with Locking Device LD6 (US version)	**LD6**

Please see page 115-119 for further information and options.

A

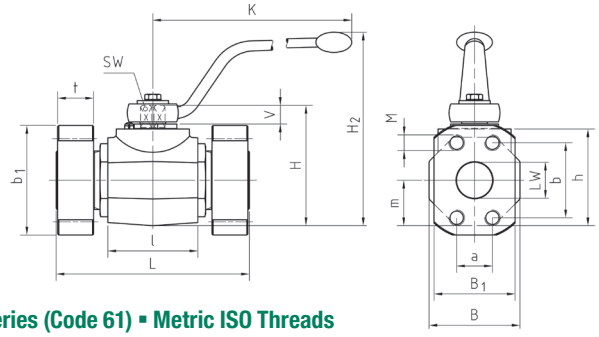

High-Pressure Forged Body Ball Valve ▪ Type FBV-2-C3
3000 PSI SAE Flange Connection (ISO 6162-1)

When ordering the standard option as indicated in the table below, the following materials will be supplied:

- Body, ball and stem: Carbon Steel
- Lever: Carbon Steel
- Ball seat: Delrin® (POM)
- O-rings: FKM (Viton®)

3000 PSI Series (Code 61) ▪ Metric ISO Threads

STAUFF Size	SAE Flange Size	Nominal Size DN	Dimensions (mm/in) LW	L	l	B	H	h	m	V	SW	K	B1	b1	t	a	b	M	H2	Nom. Pressure (bar/PSI)	Weight (kg/lbs)	Order Codes (Standard Option)
20	1-1/4	32	32	172	80	81	107	86	40,5	16,5	17	306	68	79	16	30,2	58,7	M10	171	280	7,52	FBV-2-C320M-0001-M
			1.26	6.77	3.15	3.19	4.21	3.39	1.59	.65	.67	12.05	2.68	3.11	.63	1.19	2.31		6.73	4000	16.54	
24	1-1/2	40	38	177	85	100	124	103	50	16,5	17	306	78	93	16	35,7	69,8	M12	188	210	11,09	FBV-2-C324M-0001-M
			1.50	6.97	3.35	3.94	4.88	4.06	1.97	.65	.67	12.05	3.07	3.66	.63	1.41	2.75		7.40	3000	24.40	
32	2	50	48	196	100	118	138	117	59	16,5	17	306	90	102	16	42,9	77,8	M12	202	210	19,29	FBV-2-C332M-0001-M
			1.89	7.72	3.94	4.65	5.43	4.61	2.32	.65	.67	12.05	3.54	4.02	.63	1.69	3.06		7.95	3000	42.44	
40R	2-1/2	50/65	48	196	100	118	138	117	59	16,5	17	306	105	114	19	50,8	88,9	M12	202	175	19,29	FBV-2-C340RM-0001-M
			1.89	7.72	3.94	4.65	5.43	4.61	2.32	.65	.67	12.05	4.13	4.49	.75	2.00	3.50		7.95	2500	42.44	

Dimensions and design for stainless steel may vary.

3000 PSI Series (Code 61) ▪ Unified Coarse (UNC) Threads

STAUFF Size	SAE Flange Size	Nominal Size DN	Dimensions (mm/in) LW	L	l	B	H	h	m	V	SW	K	B1	b1	t	a	b	M	H2	Nom. Pressure (bar/PSI)	Weight (kg/lbs)	Order Codes (Standard Option)
20	1-1/4	32	32	172	80	81	107	86	40,5	16,5	17	306	68	79	16	30,2	58,7	7/16–14	171	280	7,52	FBV-2-C320U-0001-M
			1.26	6.77	3.15	3.19	4.21	3.39	1.59	.65	.67	12.05	2.68	3.11	.63	1.19	2.31	UNC	6.73	4000	16.54	
24	1-1/2	40	38	177	85	100	124	103	50	16,5	17	306	78	93	16	35,7	69,8	1/2–13	188	210	11,09	FBV-2-C324U-0001-M
			1.50	6.97	3.35	3.94	4.88	4.06	1.97	.65	.67	12.05	3.07	3.66	.63	1.41	2.75	UNC	7.40	3000	24.40	
32	2	50	48	196	100	118	138	117	59	16,5	17	306	90	102	16	42,9	77,8	1/2–13	202	210	19,29	FBV-2-C332U-0001-M
			1.89	7.72	3.94	4.65	5.43	4.61	2.32	.65	.67	12.05	3.54	4.02	.63	1.69	3.06	UNC	7.95	3000	42.44	
40R	2-1/2	50/65	48	196	100	118	138	117	59	16,5	17	306	105	114	19	50,8	88,9	1/2–13	202	175	19,29	FBV-2-C340RU-0001-M
			1.89	7.72	3.94	4.65	5.43	4.61	2.32	.65	.67	12.05	4.13	4.49	.75	2.00	3.50	UNC	7.95	2500	42.44	

Please note: The final maximum working pressure is determined by flange and pipe/tubing rating.
Dimensions and design for stainless steel may vary.

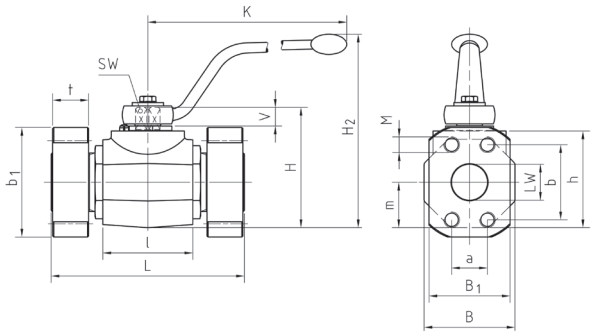

High-Pressure Forged Body Ball Valve ▪ Type FBV-2-C6
6000 PSI SAE Flange Connection (ISO 6162-2)

When ordering the standard option as indicated in the table below, the following materials will be supplied:

- Body, ball and stem: Carbon Steel
- Lever: Carbon Steel
- Ball seat: Delrin® (POM)
- O-rings: FKM (Viton®)

6000 PSI Series (Code 62) ▪ Metric ISO Threads

STAUFF Size	SAE Flange Size	Nominal Size DN	Dimensions (mm/in) LW	L	l	B	H	h	m	V	SW	K	B1	b1	t	a	b	M	H2	Nom. Pressure (bar/PSI)	Weight (kg/lbs)	Order Codes (Standard Option)
20	1-1/4	32	32	172	80	81	107	86	40,5	16,5	17	306	78	95	27	31,8	66,6	M12	171	420	7,52	FBV-2-C620M-0001-M
			1.26	6.77	3.15	3.19	4.21	3.39	1.59	.65	.67	12.05	3.07	3.74	1.06	1.25	2.62		6.73	6000	16.54	
20	1-1/4	32	32	172	80	81	107	86	40,5	16,5	17	306	78	95	27	31,8	66,6	M14	171	420	7,52	FBV-2-C620M14-0001-M
			1.26	6.77	3.15	3.19	4.21	3.39	1.59	.65	.67	12.05	3.07	3.74	1.06	1.25	2.62		6.73	6000	16.54	
24	1-1/2	40	38	177	85	100	124	103	50	16,5	17	306	94	112	30	36,5	79,4	M16	188	420	11,09	FBV-2-C624M-0001-M
			1.50	6.97	3.35	3.94	4.88	4.06	1.97	.65	.67	12.05	3.70	4.41	1.18	1.44	3.13		7.40	6000	24.40	
32	2	50	48	196	100	118	138	117	59	16,5	17	306	114	134	35	44,5	96,8	M20	202	420	19,29	FBV-2-C632M-0001-M
			1.89	7.72	3.94	4.65	5.43	4.61	2.32	.65	.67	12.05	4.49	5.28	1.38	1.75	3.81		7.95	6000	42.44	

Dimensions and design for stainless steel may vary.

6000 PSI Series (Code 62) ▪ Unified Coarse (UNC) Threads

STAUFF Size	SAE Flange Size	Nominal Size DN	Dimensions (mm/in) LW	L	l	B	H	h	m	V	SW	K	B1	b1	t	a	b	M	H2	Nom. Pressure (bar/PSI)	Weight (kg/lbs)	Order Codes (Standard Option)
20	1-1/4	32	32	172	80	81	107	86	40,5	16,5	17	306	78	95	27	31,8	66,7	1/2–13	171	420	7,52	FBV-2-C620U-0001-M
			1.26	6.77	3.15	3.19	4.21	3.39	1.59	.65	.67	12.05	3.07	3.74	1.06	1.25	2.63	UNC	6.73	6000	16.54	
24	1-1/2	40	38	177	85	100	124	103	50	16,5	17	306	94	112	30	36,5	79,4	5/8–11	188	420	11,09	FBV-2-C624U-0001-M
			1.50	6.97	3.35	3.94	4.88	4.06	1.97	.65	.67	12.05	3.70	4.41	1.18	1.44	3.13	UNC	7.40	6000	24.40	
32	2	50	48	196	100	118	138	117	59	16,5	17	306	114	134	35	44,5	96,8	3/4–10	202	420	19,29	FBV-2-C632U-0001-M
			1.89	7.72	3.94	4.65	5.43	4.61	2.32	.65	.67	12.05	4.49	5.28	1.38	1.75	3.81	UNC	7.95	6000	42.44	

Please note: The final maximum working pressure is determined by flange and pipe/tubing rating.
Dimensions and design for stainless steel may vary.

A

High-Pressure Round Body Ball Valve ▪ Type BV-2-C36

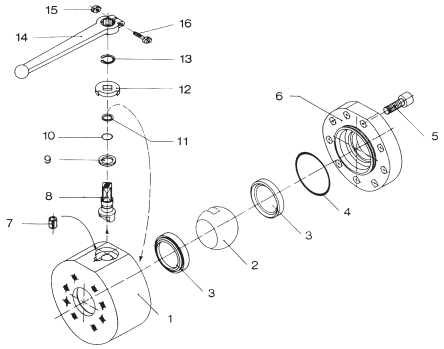

List of Components

No.	Qty.	Description
1	1	Housing
2	1	Ball
3*	2	Seat
4*	1	Cover O-Ring
5	7-9**	Cover Screws
6	1	Cover
7	1	Stop Pin
8	1	Stem
9*	1	Thrust Ring
10*	1	Stem O-Ring
11*	1	Back-up Ring
12	1	Cam Plate
13	1	Snap Ring
14	1	Handle
15	1	Nut
16	1	Screw

** Depending on valve size

Characteristics

Two-way high-pressure round body ball valves designed for use as on/off devices for hydraulic applications

Standard Construction
- Round body design for in-line assembly
- Designed for direct mount to reduce threads in fluid flow
- Supplied with lever

Standard Materials
- Body: Carbon Steel, zinc/iron-plated
- Ball: Carbon Steel, hard chrome-plated
- Stem: Carbon Steel
- Lever: Aluminium (STAUFF Size 08)
  Carbon Steel (STAUFF Sizes 12 and 32)
  Carbon Steel (STAUFF Sizes 40 and 48)
- Ball seat: Delrin® (POM)
- O-rings: FKM (Viton®)

Standard Connections Styles / Sizes
- 3000 PSI (code 61) direct SAE flange connection
- 6000 PSI (code 62) direct SAE flange connection
- Dual pattern: 3000 PSI (code 61) and 6000 PSI (code 62)
- Metric ISO and unified coarse (UNC) threads

Pressure Range
- Pressure range: up to 420 bar / 6000 PSI (depending on size and material combination of the ball valve)

Please note: The final maximum working pressure is determined by flange and pipe/tubing rating.

Temperature Range
- Operating temperature range:
  -20 °C ... +100 °C / -4 °F ... + 212 °F

Options / Accessories
- Flanges and flange kits (see catalogue STAUFF Flanges)
- Alternative lever designs/materials (see page 114)
- Locking devices (see pages 115-117)
- Actuator packages (see page 118)
- Limit switches (see page 118)
- Special ball seat and O-ring materials available for lower/higher temperatures and more aggressive media
- Seal kits (including items marked by * in the above list)

Order Codes

BV	-	2	-	C36	32	M	-	0	0	0	1	-	M	-	-
①		②		③	④	⑤		⑥	⑦	⑧	⑨		⑩	⑪	⑫

① Type

High-Pressure Round Body Ball Valve	BV

② Number of Ports

Two Ports (Two-Way Ball Valve)	2

③ Connection Style

3000/6000 PSI (Code 61/62) SAE Direct Flange Connection	C36

Please contact STAUFF for alternative connection styles.

④ Connection Size

STAUFF Size (according to dimension table):

08	12	16	20	24	32	40	48

Please contact STAUFF for alternative connection sizes.

⑤ Thread Type

Flange Connection with Metric ISO Threads	M
Flange Connection with Unified Coarse (UNC) Threads	U

⑥ Body Material / Surface Finishing

Carbon Steel, zinc/iron-plated	0

Alternative materials / surface finishings are available upon request. Contact STAUFF for further information.

⑦ Ball / Stem Material

Ball: Carbon Steel, hard chrome-plated Stem: Carbon Steel / Duplex (for STAUFF Size 48)	0

Alternative materials / surface finishings are available upon request. Contact STAUFF for further information.

⑧ Ball Seat Material

Delrin® (POM)	0

Alternative materials are available upon request. Contact STAUFF for further information.

⑨ O-Ring Material

NBR (Buna-N®)	0
FKM (Viton®)	1

Alternative materials are available upon request. Contact STAUFF for further information.

⑩ Manufacturing Code

Manufacturing code for all connection styles	M

⑪ Lever Options

Supplied with standard lever (according to table)	—
Supplied without lever	0

Alternative levers can be ordered separately. Please see page 114 for further information.

⑫ Accessories / Options

Supplied without accessories	—
Supplied with Locking Device up to DN50	LD2
Supplied with Locking Device up to DN50	LD4
Supplied with Locking Device from DN65	LD5
Supplied with Locking Device LD7 (US version)	LD7

Please see page 115-119 for further information and options.

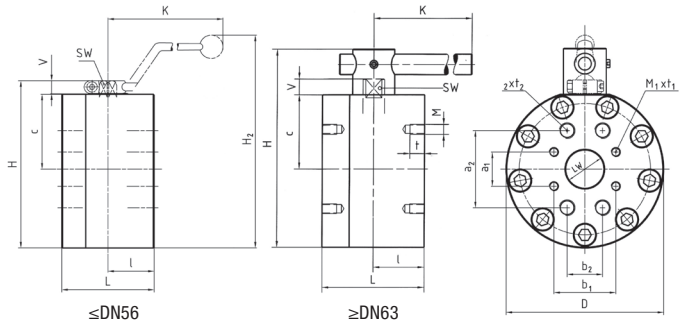

High-Pressure Round Body Ball Valve ▪ Type BV-2-C36 3000/6000 PSI Flange Connection (ISO 6162-1/2)

When ordering the standard option as indicated in the table below, the following materials will be supplied:

- Body, ball and stem: Carbon Steel
- Lever: Aluminium (STAUFF Size 08)
  Carbon Steel (STAUFF Sizes 12 and 32)
  Carbon Steel (STAUFF Sizes 40 and 48)
- Ball seat: Delrin® (POM)
- O-rings: FKM (Viton®)

Dual Pattern ▪ 3000/6000 PSI Series (Code 61/62) ▪ Metric ISO Threads

STAUFF Size	SAE Flange Size	Nominal Size DN	Dimensions (mm/in) LW	L	l	D	H	c	V	K	SW	a1	b1	M1	t1	a2	b2	M2	t2	H2	Nom. Pressure (bar/PSI)	Weight (kg/lbs)	Order Codes (Standard Option)
08	1/2	15	15	75	35	88	88	31	13	160	12	17,5	38,1	M8	18	40,5	18,2	M8	18	132	420	2,96	BV-2-C3608M-0001-M
			.59	2.95	1.38	3.46	3.46	1.22	.51	6.30	.47	.69	1.50		.71	1.59	.72		.71	5.20	6000	6.51	
12	3/4	20	20	80	35	98	100	36,5	14	171	14	22,2	47,6	M10	18	50,8	23,8	M10	18	151	420	4,20	BV-2-C3612M-0001-M
			.79	3.15	1.38	3.86	3.94	1.44	.55	6.73	.55	.87	1.87		.71	2.00	.94		.71	5.94	6000	9.24	
16	1	25	25	88	38	118	113	39,5	14	171	14	27,8	57,2	M12	20	52,4	26,2	M10	20	164	420	6,00	BV-2-C3616M-0001-M
			.98	3.46	1.50	4.65	4.45	1.56	.55	6.73	.55	1.09	2.25		.79	2.06	1.03		.79	6.46	6000	13.20	
20	1-1/4	32	32	100	50	145	158	68	17	306	17	30,2	58,7	M10	20	66,6	31,8	M12	22	229	420	11,71	BV-2-C3620M-0001-M
			1.26	3.94	1.97	5.71	6.22	2.68	.67	12.05	.67	1.19	2.31		.79	2.62	1.25		.87	9.02	6000	25.76	
24	1-1/2	40	38	110	55	165	178	78	17	306	17	35,7	69,8	M12	20	79,4	36,5	M16	27	249	420	17,10	BV-2-C3624M-0001-M
			1.50	4.33	2.17	6.50	7.01	3.07	.67	12.05	.67	1.41	2.75		.79	3.13	1.44		1.06	9.80	6000	37.62	
32	2	50	48	116	58	198	210	94	17	306	17	42,9	77,8	M12	20	96,8	44,5	M20	28	281	420	24,60	BV-2-C3632M-0001-M
			1.89	4.57	2.28	7.80	8.27	3.70	.67	12.05	.67	1.69	3.06		.79	3.81	1.75		1.10	11.06	6000	54.12	
40	2-1/2	65	63	170	75	218	275	100	20	600	16	58,7	123,8	M24	41	88,9	50,8	M12	19		420	44,50	BV-2-C3640M-0001-M
			2.48	6.69	2.95	8.58	10.83	3.94	.79	23.62	.63	2.31	4.78		1.61	3.50	2.00		.75		6000	97.90	
48	3	80	76	170	79	258	315	114,5	26	600	19	71,4	152,4	M30	47	106,4	61,9	M16	24		420	60,40	BV-2-C3648M-0001-M
			2.99	6.69	3.11	10.16	12.40	4.51	1.02	23.62	.75	2.81	6.00		1.85	4.19	2.44		.95		6000	132.88	

Dimensions and design for stainless steel may vary.

Dual Pattern ▪ 3000/6000 PSI Series (Code 61/62) ▪ Unified Coarse (UNC) Threads

STAUFF Size	SAE Flange Size	Nominal Size DN	Dimensions (mm/in) LW	L	l	D	H	c	V	K	SW	a1	b1	M1	t1	a2	b2	M2	t2	H2	Nom. Pressure (bar/PSI)	Weight (kg/lbs)	Order Codes (Standard Option)
08	1/2	15	15	75	35	88	88	31	13	160	12	17,5	38,1	5/16–18 UNC	18	40,5	18,2	5/16–18 UNC	18	132	420	2,96	BV-2-C3608U-0001-M
			.59	2.95	1.38	3.46	3.46	1.22	.51	6.30	.47	.69	1.50		.71	1.59	.72		.71	5.20	6000	6.51	
12	3/4	20	20	80	35	98	100	36,5	14	171	14	22,2	47,6	3/8–16 UNC	18	50,8	23,8	3/8–16 UNC	18	151	420	4,20	BV-2-C3612U-0001-M
			.79	3.15	1.38	3.86	3.94	1.44	.55	6.73	.55	.87	1.87		.71	2.00	.94		.71	5.94	6000	9.24	
16	1	25	25	88	38	118	113	39,5	14	171	14	27,8	57,2	7/16–14 UNC	20	52,4	26,2	3/8–16 UNC	20	164	420	6,00	BV-2-C3616U-0001-M
			.98	3.46	1.50	4.65	4.45	1.56	.55	6.73	.55	1.09	2.25		.79	2.06	1.03		.79	6.46	6000	13.20	
20	1-1/4	32	32	100	50	145	158	68	17	306	17	30,2	58,7	7/16–14 UNC	20	66,6	31,8	1/2–13 UNC	22	229	420	11,71	BV-2-C3620U-0001-M
			1.26	3.94	1.97	5.71	6.22	2.68	.67	12.05	.67	1.19	2.31		.79	2.62	1.25		.87	9.02	6000	25.76	
24	1-1/2	40	38	110	55	165	178	78	17	306	17	35,7	69,8	1/2–13 UNC	20	79,4	36,5	5/8–11 UNC	27	249	420	17,10	BV-2-C3624U-0001-M
			1.50	4.33	2.17	6.50	7.01	3.07	.67	12.05	.67	1.41	2.75		.79	3.13	1.44		1.06	9.80	6000	37.62	
32	2	50	48	116	58	198	210	94	17	306	17	42,9	77,8	1/2–13 UNC	20	96,8	44,5	3/4–10 UNC	28	281	420	24,60	BV-2-C3632U-0001-M
			1.89	4.57	2.28	7.80	8.27	3.70	.67	12.05	.67	1.69	3.06		.79	3.81	1.75		1.10	11.06	6000	54.12	

Please note: The final maximum working pressure is determined by flange and pipe/tubing rating.
Lever must be fixed in central position during operation. In case of vibration, the lever may otherwise operate the valve by itself.
Dimensions and design for stainless steel may vary.

A

High-Pressure Round Body Ball Valve ▪ Type BV-2-C

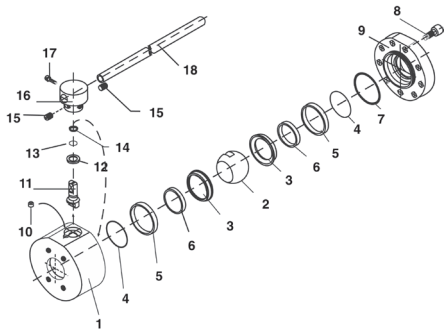

List of Components

No.	Qty.	Description
1	1	Housing
2	1	Ball
3*	2	Seat
4*	2	O-Ring
5	2	Outer S/S Support Ring
6	2	Inner S/S Support Ring
7*	1	Cover O-Ring
8	9	Cover Bolts
9	1	Cover
10	1	Stop Screw
11	1	Stem
12*	1	Thrust Ring
13*	1	Stem O-Ring
14*	1	Back-up Ring
15	2	Set Screws
16	1	Stem/Handle Adaptor
17	1	Screw
18	1	Steel Handle

Characteristics

Two-way high-pressure round body ball valves designed for use as on/off devices for hydraulic applications

Standard Construction
- Round body design for in-line assembly
- Machined parts for reduced torque operation
- Designed for direct mount to reduce threads in fluid flow
- Supplied with removable, adjustable lever

Standard Materials
- Body: Carbon Steel, zinc/iron-plated
- Ball: Carbon Steel, hard chrome-plated
- Stem: Carbon Steel
- Lever: Carbon Steel
- Ball seat: Delrin® (POM)
- O-rings: FKM (Viton®)

Standard Connections Styles / Sizes
- 3000 PSI (code 61) direct SAE flange connection
- 6000 PSI (code 62) direct SAE flange connection
- Metric ISO and unified coarse (UNC) threads

Pressure Range
- Pressure range: up to 420 bar / 6090 PSI (depending on size and material combination of the ball valve)

Please note: The final maximum working pressure is determined by flange and pipe/tubing rating.

Temperature Range
- Operating temperature range: -20 °C ... +100 °C / -4 °F ... + 212 °F

Options / Accessories
- Flanges and flange kits (see catalogue STAUFF Flanges)
- Locking devices (see pages 115-117)
- Actuator packages (see page 118)
- Limit switches (see page 118)
- Stainless Steel body
- Stainless Steel ball and stem
- Special ball seat and O-ring materials available for
- lower/higher temperatures and more aggressive media
- Seal kits (including items marked by * in the above list)

Order Codes

BV	-	2	-	C3	80	M	-	0	0	0	1	-	M	-	-
①		②		③	④	⑤		⑥	⑦	⑧	⑨		⑩	⑪	⑫

① Type

High-Pressure Round Body Ball Valve	**BV**

② Number of Ports

Two Ports (Two-Way Ball Valve)	**2**

③ Connection Style

3000 PSI (Code 61) SAE Direct Flange Connection	**C3**
6000 PSI (Code 62) SAE Direct Flange Connection	**C6**

Please contact STAUFF for alternative connection styles.

④ Connection Size

STAUFF Size (according to dimension table):

40	**48**	**64**	**80**

Please contact STAUFF for alternative connection sizes.

⑤ Thread Type

Flange Connection with Metric ISO Threads	**M**
Flange Connection with Unified Coarse (UNC) Threads	**U**

⑥ Body Material / Surface Finishing

Carbon Steel, zinc/iron-plated	**0**
Stainless Steel V4A (AISI 316Ti)	**1**

Note: Stainless steel version may vary in dimensions and design.
Alternative materials / surface finishings are available upon request. Contact STAUFF for further information.

⑦ Ball / Stem Material

Ball: Carbon Steel, hard chrome-plated Stem: Carbon Steel / Duplex (from STAUFF Size 48 on)	**0**
Ball / Stem: Stainless Steel V4A (AISI 316Ti)	**1**

Alternative materials / surface finishings are available upon request. Contact STAUFF for further information.

⑧ Ball Seat Material

Delrin® (POM)	**0**

Alternative materials are available upon request. Contact STAUFF for further information.

⑨ O-Ring Material

NBR (Buna-N®)	**0**
FKM (Viton®)	**1**

Alternative materials are available upon request. Contact STAUFF for further information.

⑩ Manufacturing Code

Manufacturing code for all connection styles	**M**

⑪ Lever Options

Supplied with standard lever (according to table)	**—**
Supplied without lever	**0**

⑫ Accessories / Options

Supplied without accessories	**—**
Supplied with Locking Device up to DN50	**LD2**
Supplied with Locking Device up to DN50	**LD4**
Supplied with Locking Device from DN65	**LD5**
Supplied with Locking Device LD7 (US version)	**LD7**

Please see page 115-119 for further information and options.

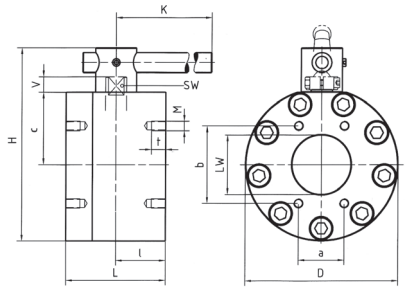

High-Pressure Round Body Ball Valve ▪ Type BV-2-C3
3000 PSI Flange Connection (ISO 6162-1)

Flange Position

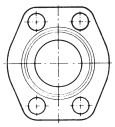

3000 PSI
(Code 61)

When ordering the standard option as indicated in the table below, the following materials will be supplied:

- Body, ball and stem: Carbon Steel
- Lever: Carbon Steel
- Ball seat: Delrin® (POM)
- O-rings: FKM (Viton®)

3000 PSI Series (Code 61) ▪ Metric ISO Threads

STAUFF Size	SAE Flange Size	Nominal Size DN	Dimensions (mm/in) LW	L	l	D	H	c	V	K	SW	a	b	M	t	Nom. Pressure (bar/PSI)	Weight (kg/lbs)	Order Codes (Standard Option)
64	4	100	100	170	85	258	326	122	27	900	24	77,8	130,2	M16	24	35	60,50	BV-2-C364M-0001-M
			3.94	6.69	3.35	10.16	12.83	4.80	1.06	35.43	.94	3.06	5.13		.95	500	133.10	
80	5	125	118	210	105	295	377	140	33	900	36	92,1	152,4	M16	30	35	95,50	BV-2-C380M-0001-M
			4.65	8.27	4.13	11.61	14.84	5.51	1.30	35.43	1.42	3.63	6.00		1.18	500	210.10	

Dimensions and design for stainless steel may vary.

3000 PSI Series (Code 61) ▪ Unified Coarse (UNC) Threads

STAUFF Size	SAE Flange Size	Nominal Size DN	Dimensions (mm/in) LW	L	l	D	H	c	V	K	SW	a	b	M	t	Nom. Pressure (bar/PSI)	Weight (kg/lbs)	Order Codes (Standard Option)
40	2-1/2	65	63	150	75	198	259	94	20	600	16	50,8	88,9	1/2–13 UNC	19	175	33,50	BV-2-C340U-0001-M
			2.48	5.91	2.95	7.80	10.20	3.70	.79	23.62	.63	2.00	3.50		.75	2500	73.70	
48	3	80	76	150	80	218	284	103,5	26	600	19	61,9	106,4	5/8–11 UNC	24	160	41,00	BV-2-C348U-0001-M
			2.99	5.91	3.15	8.58	11.18	4.07	1.02	23.62	.75	2.44	4.19		.95	2300	90.20	
64	4	100	100	170	85	258	326	122	27	900	24	77,8	130,2	5/8–11 UNC	24	35	60,50	BV-2-C364U-0001-M
			3.94	6.69	3.35	10.16	12.83	4.80	1.06	35.43	.94	3.06	5.13		.95	500	133.10	
80	5	125	118	210	105	295	377	140	33	900	36	92,1	152,4	5/8–11 UNC	30	35	95,50	BV-2-C380U-0001-M
			4.65	8.27	4.13	11.61	14.84	5.51	1.30	35.43	1.42	3.63	6.00		1.18	500	210.10	

Please note: The final maximum working pressure is determined by flange and pipe/tubing rating.
Lever must be fixed in central position during operation. In case of vibration, the lever may otherwise operate the valve by itself.
Dimensions and design for stainless steel may vary.

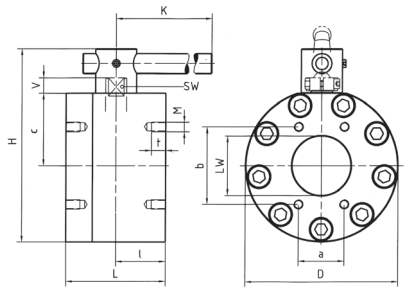

High-Pressure Round Body Ball Valve ▪ Type BV-2-C6
6000 PSI Flange Connection (ISO 6162-2)

Flange Position

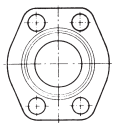

6000 PSI
(Code 62)

When ordering the standard option as indicated in the table below, the following materials will be supplied:

- Body, ball and stem: Carbon Steel
- Lever: Carbon Steel
- Ball seat: Delrin® (POM)
- O-rings: FKM (Viton®)

6000 PSI Series (Code 62) ▪ Unified Coarse (UNC) Threads

STAUFF Size	SAE Flange Size	Nominal Size DN	Dimensions (mm/in) LW	L	l	D	H	c	V	K	SW	a	b	M	t	Nom. Pressure (bar/PSI)	Weight (kg/lbs)	Order Codes (Standard Option)
40	2-1/2	65	63	170	75	218	275	100	20	600	16	123,8	58,8	7/8–9 UNC	41	420	44,50	BV-2-C640U-0001-M
			2.48	6.69	2.95	8.58	10.83	3.94	.79	23.62	.63	4.87	2.31		1.61	6000	97.90	
48	3	80	76	170	80	258	315	114,5	21	600	19	152,4	71,4	1-1/8–7 UNC	47	420	63,50	BV-2-C648U-0001-M
			2.99	6.69	3.15	10.16	12.40	4.51	.83	23.62	.75	6.00	2.81		1.85	6000	139.71	

Please note: The final maximum working pressure is determined by flange and pipe/tubing rating.
Lever must be fixed in central position during operation. In case of vibration, the lever may otherwise operate the valve by itself.
Dimensions and design for stainless steel may vary.

A

High-Pressure Round Body Ball Valve ▪ Type BV-2-ISO

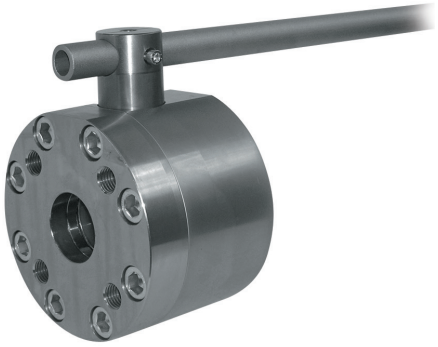

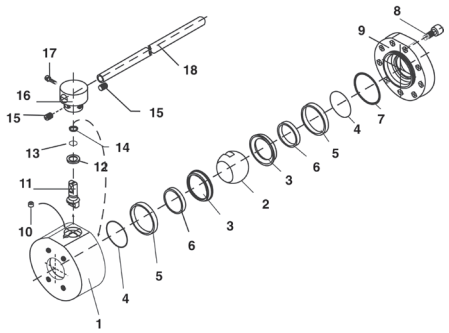

List of Components

No.	Qty.	Description
1	1	Housing
2	1	Ball
3*	2	Seat
4*	2	O-Ring
5	2	Outer S/S Support Ring
6	2	Inner S/S Support Ring
7*	1	Cover O-Ring
8	9	Cover Bolts
9	1	Cover
10	1	Stop Screw
11	1	Stem
12*	1	Thrust Ring
13*	1	Stem O-Ring
14*	1	Back-up Ring
15	2	Set Screws
16	1	Stem/Handle Adaptor
17	1	Screw
18	1	Steel Handle

Characteristics

Two-way high-pressure round body ball valves designed for use as on/off devices for hydraulic applications

Standard Construction
- Round body design for in-line assembly
- Machined parts for reduced torque operation
- Designed for direct mount to reduce threads in fluid flow
- Supplied with lever

Standard Materials
- Body: Carbon Steel, zinc/iron-plated
- Ball: Carbon Steel, hard chrome-plated
- Stem: Carbon Steel
- Lever: Aluminium (Nominal Size DN13)
  Carbon Steel (Nominal Sizes DN19 and DN56)
  Carbon Steel (Nominal Sizes DN63 to DN200)
- Ball seat: Delrin® (POM)
- O-rings: FKM (Viton®)

Standard Connections Styles / Sizes
- 250 bar / 3600 PSI series ISO 6164 flange connection
- 400 bar / 5800 PSI series ISO 6164 flange connection
- 350 bar / 5000 PSI series (similar to ISO 6164) flange connection
- Metric ISO threads

Pressure Range
- Pressure range: up to 400 bar / 5800 PSI (depending on size and material combination of the ball valve)

Please note: The final maximum working pressure is determined by flange and pipe/tubing rating.

Temperature Range
- Operating temperature range:
  -20 °C ... +100 °C / -4 °F ... + 212 °F

Options / Accessories
- Alternative lever designs/materials (see page 114)
- Locking devices (see pages 115-117)
- Actuator packages (see page 118)
- Limit switches (see page 118)
- Stainless Steel body
- Stainless Steel ball and stem
- Special ball seat and O-ring materials available for
- lower/higher temperatures and more aggressive media
- Seal kits (including items marked by * in the above list)

Order Codes

BV	-	2	-	ISO3	DN19	-	0	0	0	1	-	M	-	-
①		②		③	④		⑤	⑥	⑦	⑧		⑨	⑩	⑪

① Type

High-Pressure Round Body Ball Valve	**BV**

② Number of Ports

Two Ports (Two-Way Ball Valve)	**2**

③ Connection Style

250 bar / 3600 PSI Series ISO 6164 Flange Connection with Metric ISO Threads	**ISO2**
400 bar / 5800 PSI Series ISO 6164 Flange Connection with Metric ISO Threads	**ISO4**
350 bar / 5000 PSI Series (not part of ISO 6164) Flange Connection with Metric ISO Threads	**ISO3**

Please contact STAUFF for alternative connection styles.

④ Connection Size

Nominal Size DN

DN13	**DN19**	**DN25**	**DN32**	**DN38**	**DN51**
DN56	**DN63**	**DN80**	**DN100**	**DN125**	**DN150**
DN200					

Please contact STAUFF for alternative connection sizes.

⑤ Body Material / Surface Finishing

Carbon Steel, zinc/iron-plated	**0**
Stainless Steel V4A (AISI 316Ti)	**1**

Note: Stainless steel version may vary in dimensions and design.
Alternative materials / surface finishings are available upon request. Contact STAUFF for further information.

⑥ Ball / Stem Material

Ball: Carbon Steel, hard chrome-plated Stem: Carbon Steel / Duplex (from DN63 on)	**0**
Ball / Stem: Stainless Steel V4A (AISI 316Ti)	**1**

Alternative materials / surface finishings are available upon request. Contact STAUFF for further information.

⑦ Ball Seat Material

Delrin® (POM)	**0**

Alternative materials are available upon request. Contact STAUFF for further information.

⑧ O-Ring Material

NBR (Buna-N®)	**0**
FKM (Viton®)	**1**

Alternative materials are available upon request. Contact STAUFF for further information.

⑨ Manufacturing Code

Manufacturing code for all connection styles	**M**

⑩ Lever Options

Supplied with standard lever (according to table)	**—**
Supplied without lever	**0**

Alternative levers can be ordered separately.
Please see page 114 for further information.

⑪ Accessories / Options

Supplied without accessories	**—**
Supplied with Locking Device up to DN50	**LD2**
Supplied with Locking Device up to DN50	**LD4**
Supplied with Locking Device from DN65	**LD5**
Supplied with Locking Device LD7 (US version)	**LD7**

Please see page 115-119 for further information and options.

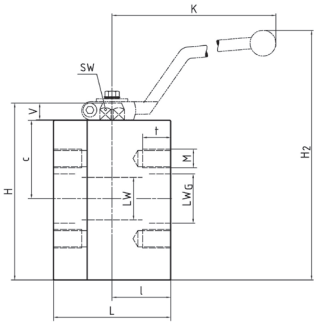

≤DN56

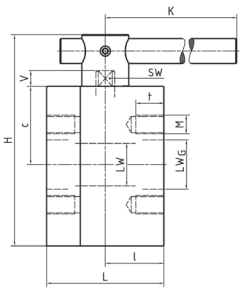

≥DN63

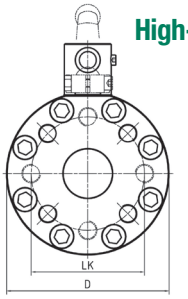

High-Pressure Round Body Ball Valve ▪ Type BV-2-ISO ISO Flange Connection (ISO 6164)

A

When ordering the standard option as indicated in the table below, the following materials will be supplied:

- Body, ball and stem: Carbon Steel
- Lever: Aluminium (Nominal Size DN13)
  Carbon Steel (Nominal Sizes DN19 and DN56)
  Carbon Steel (Nom. Sizes DN63 to DN200)
- Ball seat: Delrin® (POM)
- O-rings: FKM (Viton®)

250 bar / 3600 PSI Series (ISO 6164) ▪ Metric ISO Threads

STAUFF Size	Nominal Size DN	Dimensions (mm/in) LW	LWG	L	l	D	H	c	V	K	SW	LK	M	t	H2	Nom. Pressure (bar/PSI)	Weight (kg/lbs)	Order Codes (Standard Option)
08	13	15	15	85	45	78	83	31	13	160	12	42 [1]	4 x M8	16	127	350	2,90	BV-2-ISO2DN13-0001-M
		.59	.59	3.35	1.77	3.07	3.27	1.22	.51	6.30	.47	1.65 [1]		.63	5.00	5000	4.84	
12	19	20	20	88	38	119	110	36,5	14	171	14	50	4 x M8	15	161	350	6,80	BV-2-ISO2DN19-0001-M
		.79	.79	3.46	1.50	4.69	4.33	1.44	.55	6.73	.55	1.97		.59	6.34	5000	14.96	
16	25	25	25	88	38	126	117	39,5	14	171	14	62	4 x M10	20	168	315	7,20	BV-2-ISO2DN25-0001-M
		.98	.98	3.46	1.50	4.96	4.61	1.56	.55	6.73	.55	2.44		.79	6.61	4568	15.84	
20	32	32	32	105	50	145	158	68	17	306	17	73	4 x M12	21	229	250	12,50	BV-2-ISO2DN32-0001-M
		1.26	1.26	4.13	1.97	5.71	6.22	2.68	.67	12.05	.67	2.87		.83	9.02	3600	27.50	
24	38	38	38	110	55	165	178	78	17	306	17	85	4 x M16	24.5	249	250	16,60	BV-2-ISO2DN38-0001-M
		1.50	1.50	4.33	2.17	6.50	7.01	3.07	.67	12.05	.67	3.35		.96	9.80	3600	36.52	
32	51	48	47	116	58	198	210	94	17	306	17	98	4 x M16	25.5	281	250	24,90	BV-2-ISO2DN51-0001-M
		1.89	1.85	4.57	2.28	7.80	8.27	3.70	.67	12.05	.67	3.86		1.00	11.06	3600	54.78	
-	56	48	58	123	58	198	210	94	17	306	17	118	4 x M20	33	281	250	26,60	BV-2-ISO2DN56-0001-M
		1.89	2.28	4.84	2.28	7.80	8.27	3.70	.67	12.05	.67	4.65		1.30	11.06	3600	58.52	
40	63	63	70	150	75	208	270	100	20	600	16	145	4 x M20	33		250	36,90	BV-2-ISO2DN63-0001-M [1]
		2.48	2.76	5.9	2.9	8.19	10.6	3.94	.79	23.6	.63	5.71		1.3		3600	81.18	

Dimensions and design for stainless steel may vary.

400 bar / 5800 PSI Series (ISO 6164) ▪ Metric ISO Threads

STAUFF Size	Nominal Size DN	Dimensions (mm/in) LW	LWG	L	l	D	H	c	V	K	SW	LK	M	t	H2	Nom. Pressure (bar/PSI)	Weight (kg/lbs)	Order Codes (Standard Option)
08	13	15	14	85	45	78	83	31	13	160	12	42	4 x M8	16	127	400	2,90	BV-2-ISO4DN13-0001-M
		.59	.55	3.35	1.77	3.07	3.27	1.22	.51	6.30	.47	1.65		.63	5.00	5800	6.38	
12	19	20	18	88	38	119	110	36,5	14	171	14	50	4 x M8	15	161	400	6,80	BV-2-ISO4DN19-0001-M
		.79	.71	3.46	1.50	4.69	4.33	1.44	.55	6.73	.55	1.97		.59	6.34	5800	14.96	
16	25	25	22	88	38	126	117	39,5	14	171	14	62	4 x M10	20	168	400	7,20	BV-2-ISO4DN25-0001-M
		.98	.87	3.46	1.50	4.96	4.61	1.56	.55	6.73	.55	2.44		.79	6.61	5800	15.84	
20	32	32	29	105	50	145	158	68	17	306	17	73	4 x M12	21	229	400	12,50	BV-2-ISO4DN32-0001-M
		1.26	1.14	4.13	1.97	5.71	6.22	2.68	.67	12.05	.67	2.87		.83	9.02	5800	27.50	
24	38	38	35	110	55	165	178	78	17	306	17	85	4 x M16	24,5	249	400	16,60	BV-2-ISO4DN38-0001-M
		1.50	1.38	4.33	2.17	6.50	7.01	3.07	.67	12.05	.67	3.35		.96	9.80	5800	36.52	
32	51	48	43	123	58	198	210	94	17	306	17	98	4 x M16	25,5	281	400	24,90	BV-2-ISO4DN51-0001-M
		1.89	1.69	4.84	2.28	7.80	8.27	3.70	.67	12.05	.67	3.86		1.00	11.06	5800	54.78	
-	56	48	53	123	58	198	210	94	17	306	17	118	4 x M20	31	281	400	26,60	BV-2-ISO4DN56-0001-M
		1.89	2.09	4.84	2.28	7.80	8.27	3.70	.67	12.05	.67	4.65		1.22	11.06	5800	58.52	
40	63	65	58	150	75	224	286	108	20	600	16	145	4 x M24	37,5		400	42,53	BV-2-ISO4DN63-0001-M [1]
		2.56	2.28	5.91	2.95	8.82	11.26	4.25	.79	23.62	.63	5.71		1.48		5800	93.57	
-	70	65	63	150	75	224	286	108	20	600	16	160	4 x M24	37,5		315	43,00	BV-2-ISO4DN70-0001-M [1]
		2.56	2.48	5.91	2.95	8.82	11.26	4.25	.79	23.62	.63	6.30		1.48		4568	94.60	
48	80	76	76	170	78	258	315	114,5	26	600	19	175	4 x M30	35		400	63,00	BV-2-ISO4DN80-0001-M [1]
		2.99	2.99	6.69	3.07	10.16	12.40	4.51	1.02	23.62	.75	6.89		1.38		5800	138.60	

Dimensions and design for stainless steel may vary.

350 bar / 5000 PSI Series (not part of ISO 6164) ▪ Metric ISO Threads

STAUFF Size	Nominal Size DN	Dimensions (mm/in) LW	LWG	L	l	D	H	c	V	K	SW	LK	M	t	H2	Nom. Pressure (bar/PSI)	Weight (kg/lbs)	Order Codes (Standard Option)
12	19	20	20	88	38	119	110	36,5	14	171	14	64	4 x M12	22	161	350	6,80	BV-2-ISO3DN19-0001-M
		.79	.79	3.46	1.50	4.69	4.33	1.44	.55	6.73	.55	2.52		.87	6.34	5000	14.96	
16	25	25	25	88	38	126	117	39,5	14	171	14	72	4 x M12	20	168	350	7,20	BV-2-ISO3DN25-0001-M
		.98	.98	3.46	1.50	4.96	4.61	1.56	.55	6.73	.55	2.83		.79	6.61	5000	15.84	
20	32	32	32	105	50	145	158	68	17	306	17	80	4 x M16	24	229	350	12,50	BV-2-ISO3DN32-0001-M
		1.26	1.26	4.13	1.97	5.71	6.22	2.68	.67	12.05	.67	3.15		.95	9.02	5000	27.50	
24	38	38	38	110	55	165	178	78	17	306	17	98	4 x M16	25	249	350	16,60	BV-2-ISO3DN38-0001-M
		1.50	1.50	4.33	2.17	6.50	7.01	3.07	.67	12.05	.67	3.86		.98	9.80	5000	36.52	
32	51	48	48	122	58	198	210	94	17	306	17	118	4 x M20	28	281	350	24,90	BV-2-ISO3DN51-0001-M
		1.89	1.89	4.85	2.28	7.80	8.27	3.70	.67	12.05	.67	4.65		1.10	11.06	5000	54.78	
40	63	65	63	150	75	208	270	100	20	600	16	145	4 x M24	36		350	36,00	BV-2-ISO3DN63-0001-M [1]
		2.56	2.48	5.91	2.95	8.19	1.63	3.94	.79	23.62	.63	5.71		1.42		5000	79.36	
48	80	Use BV-2-ISO4DN80-0001-M from the 400 bar / 5800 PSI Series (ISO 6164)																BV-2-ISO4DN80-0001-M [1]
64	100	100	100	200	100	260	327	122	26	900	24	200	8 x M24	36		350	70,00	BV-2-ISO3DN100-0001-M [1]
		3.94	3.94	7.87	3.94	1.24	12.87	4.80	1.02	35.43	.94	7.87		1.42		5000	154.32	
80	125	118	118	230	110	390	470	185	32	900	36	245	8 x M30	45		350	209,00	BV-2-ISO3DN125-0001-M [1]
		4.65	4.65	9.06	4.33	15.35	18.50	7.28	1.26	35.43	1.42	9.65		1.77		5000	460.77	
96	150	150	150	285	130	390	475	190	32	900	36	245	8 x M30	46		350	225,00	BV-2-ISO3DN150-0001-M [1]
		5.91	5.91	11.22	5.12	15.35	18.70	7.48	1.26	35.43	1.42	9.65		1.81		5000	496.04	
128	200	192	200	378	150	456	598	223	61	940	46	315	8 x M36	55		350	395,00	BV-2-ISO3DN200-0001-M [1]
		7.56	7.87	14.88	5.91	17.95	23.54	8.78	2.40	37.01	1.81	12.40		2.17		5000	868.62	

Please note: The final maximum working pressure is determined by flange and pipe/tubing rating.

Dimensions and design for stainless steel may vary.

[1] Please note: Lever must be fixed in central position during operation. In case of vibration, the lever may otherwise operate the valve by itself.

A

High-Pressure Round Body Ball Valve ▪ Type BV-2-CET

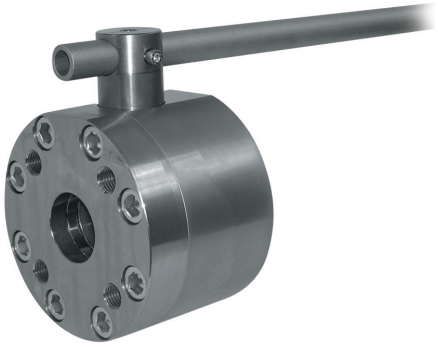

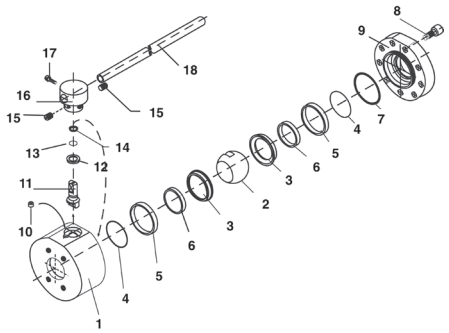

List of Components

No.	Qty.	Description
1	1	Housing
2	1	Ball
3*	2	Seat
4*	2	O-Ring
5	2	Outer S/S Support Ring
6	2	Inner S/S Support Ring
7*	1	Cover O-Ring
8	9	Cover Bolts
9	1	Cover
10	1	Stop Screw
11	1	Stem
12*	1	Thrust Ring
13*	1	Stem O-Ring
14*	1	Back-up Ring
15	2	Set Screws
16	1	Stem/Handle Adaptor
17	1	Screw
18	1	Steel Handle

Characteristics

Two-way high-pressure round body ball valves designed for use as on/off devices for hydraulic applications

Standard Construction
- Round body design for in-line assembly
- Machined parts for reduced torque operation
- Designed for direct mount to reduce threads in fluid flow
- Supplied with lever

Standard Materials
- Body: Carbon Steel, zinc/iron-plated
- Ball: Carbon Steel, hard chrome-plated
- Stem: Carbon Steel
- Lever: Zinc (Nominal Size DN 50-DN 56)
  Carbon Steel (Nominal Sizes DN 60 to 100)
- Ball seat: Delrin® (POM)
- O-rings: FKM (Viton®)

Standard Connections Styles / Sizes
- 250 bar / 3600 PSI series CETOP RP 63 H flange connection
- 400 bar / 5800 PSI series CETOP RP 63 H flange connection
- Metric ISO threads

Pressure Range
- Pressure range: up to 400 bar / 5800 PSI (depending on size and material combination of the ball valve)

Please note: The final maximum working pressure is determined by flange and pipe/tubing rating.

Temperature Range
- Operating temperature range:
  -20 °C ... +100 °C / -4 °F ... + 212 °F

Options / Accessories
- Locking devices (see pages 115-117)
- Actuator packages (see page 118)
- Limit switches (see page 118)
- Stainless Steel body
- Stainless Steel ball and stem
- Special ball seat and O-ring materials available for
- lower/higher temperatures and more aggressive media
- Seal kits (including items marked by * in the above list)

Order Codes

BV	-	2	-	CET4	DN51	-	0	0	0	1	-	M	-	-
①		②		③	④		⑤	⑥	⑦	⑧		⑨	⑩	⑪

① Type

High-Pressure Round Body Ball Valve	**BV**

② Number of Ports

Two Ports (Two-Way Ball Valve)	**2**

③ Connection Style

250 bar / 3600 PSI Series CETOP Flange Connection with Metric ISO Threads	**CET2**
400 bar / 5800 PSI Series CETOP Flange Connection with Metric ISO Threads	**CET4**

Please contact STAUFF for alternative connection styles.

④ Connection Size

Nominal Size DN

DN51	**DN56**	**DN63**	**DN80**	**DN100**

Please contact STAUFF for alternative connection sizes.

⑤ Body Material / Surface Finishing

Carbon Steel, zinc/iron-plated	**0**
Stainless Steel V4A (AISI 316Ti)	**1**

Note: Stainless steel version may vary in dimensions and design.
Alternative materials / surface finishings are available upon request. Contact STAUFF for further information.

⑥ Ball / Stem Material

Ball: Carbon Steel, hard chrome-plated Stem: Carbon Steel / Duplex (from DN63 on)	**0**
Ball / Stem: Stainless Steel V4A (AISI 316Ti)	**1**

Alternative materials / surface finishings are available upon request. Contact STAUFF for further information.

⑦ Ball Seat Material

Delrin® (POM)	**0**

Alternative materials are available upon request. Contact STAUFF for further information.

⑧ O-Ring Material

NBR (Buna-N®)	**0**
FKM (Viton®)	**1**

Alternative materials are available upon request. Contact STAUFF for further information.

⑨ Manufacturing Code

Manufacturing code for all connection styles	**M**

⑩ Lever Options

Supplied with standard lever (according to table)	**—**
Supplied without lever	**0**

⑪ Accessories / Options

Supplied without accessories	**—**
Supplied with Locking Device up to DN50	**LD2**
Supplied with Locking Device up to DN50	**LD4**
Supplied with Locking Device from DN65	**LD5**
Supplied with Locking Device LD7 (US version)	**LD7**

Please see page 115-119 for further information and options.

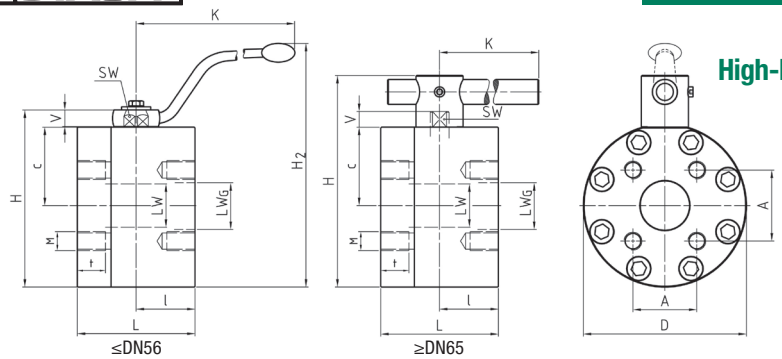

High-Pressure Round Body Ball Valve ▪ Type BV-2-CET CETOP Flange Connection (CETOP RP 63 H)

A

When ordering the standard option as indicated in the table below, the following materials will be supplied:

- Body, ball and stem: Carbon Steel
- Lever: Zinc (Nominal Size DN 50-DN 56)
  Carbon Steel (Nominal Sizes DN 60 to 100)
- Ball seat: Delrin® (POM)
- O-rings: FKM (Viton®)

250 bar / 3600 PSI Series (CETOP RP 63 H) ▪ Metric ISO Threads

STAUFF Size	Flange Size	Nominal Size DN	Dimensions (mm/in) LW	LWG	L	l	D	H	c	V	K	SW	A	M	t	H2	Nom. Pressure (bar/PSI)	Weight (kg/lbs)	Order Codes (Standard Option)
32	2	51	48	47	123	58	198	210	94	17	306	17	69,4	M16	24,5	281	250	24,90	BV-2-CET2DN51-0001-M
			1.89	1.85	4.84	2.28	7.80	8.27	3.70	.67	12.04	.67	2.73		.96	11.06	3600	54.78	
-	2-1/2	56	48	58	123	58	198	210	94	17	306	17	83,4	M20	33	281	250	26,60	BV-2-CET2DN56-0001-M
			1.89	2.28	4.84	2.28	7.80	8.27	3.70	.67	12.04	.67	3.28		1.30	11.06	3600	58.52	
40	3	63	63	70	150	75	208	270	100	20	600	16	102,5	M20	33		250	36,90	BV-2-CET2DN63-0001-M [1]
			2.48	2.76	5.91	2.95	8.19	1.63	3.94	.79	23.62	.63	4.04		1.30		3600	81.18	
48	3	80	76	70	170	78	258	318	114,5	26	600	16	102,5	M20	37		250	62,50	BV-2-CET2DN80-0001-M [1]
			2.99	2.76	6.69	3.07	10.16	12.52	4.51	1.02	23.62	.63	4.04		1.46		3600	137.50	
64	4	100	100	90	200	100	258	326	122	26	900	24	113,2	M24	40		250	70,40	BV-2-CET2DN100-0001-M [1]
			3.94	3.54	7.87	3.93	10.16	12.83	4.80	1.02	35.43	.94	4.46		1.57		3600	154.88	

Dimensions and design for stainless steel may vary.

400 bar / 5800 PSI Series (CETOP RP 63 H) ▪ Metric ISO Threads

STAUFF Size	Flange Size	Nominal Size DN	Dimensions (mm/in) LW	LWG	L	l	D	H	c	V	K	SW	A	M	t	H2	Nom. Pressure (bar/PSI)		Weight (kg/lbs)	Order Codes (Standard Option)
32	2	51	48	43	116	58	198	210	94	17	306	17	69,4	M16	24,5	281	250	400	24,90	BV-2-CET4DN51-0001-M
			1.89	1.69	4.57	2.28	7.80	8.27	3.70	.67	12.04	.67	2.73		.96	11.06	3600	5800	54.78	
-	2-1/2	56	48	53	123	58	198	210	94	17	306	17	83,4	M20	33	281	250	400	26,60	BV-2-CET4DN56-0001-M
			1.89	2.09	4.84	2.28	7.80	8.27	3.70	.67	12.04	.67	3.28		1.30	11.06	3600	5800	58.52	
40	3	63	63	58	150	75	224	286	108	20	600	16	102,5	M20	37.5		400		42.53	BV-2-CET4DN63-0001-M [1]
			2.56	2.28	5.91	2.95	8.82	11.26	4.25	.79	23.62	.63	4.04		1.47		5800		93.56	
48	4	80	76	74	170	78	258	315	114,5	26	600	19	113,2	M24	35		400		63,00	BV-2-CET4DN80-0001-M [1]
			2.99	2.91	6.69	3.07	10.15	12.40	4.51	1.02	23.62	.75	4.46		1.38		5800		138.60	

Please note: The final maximum working pressure is determined by flange and pipe/tubing rating.

[1] Lever must be fixed in central position during operation. In case of vibration, the lever may otherwise operate the valve by itself.

Dimensions and design for stainless steel may vary.

A

High-Pressure Block Body Ball Valve ▪ Type KHZ-2-C

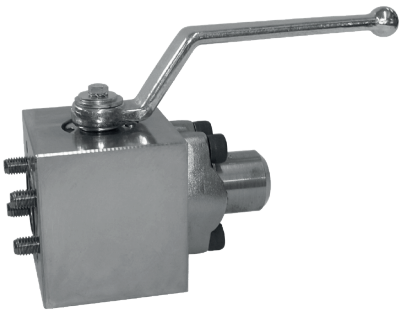

Characteristics

Two-way high-pressure block body ball valves designed for use as on/off devices for hydraulic applications

Standard Construction
- Compact block body design for manifold mounting or in-line assembly
- Supplied with off-set lever

Please note: Manifold side of valve must be secured to manifold or flange prior to operation. Failure to comply could lead to serious injury or death.

Standard Materials
- Body: Carbon Steel, zinc/iron-plated
- Ball: Carbon Steel, hard chrome-plated
- Stem: Carbon Steel
- Lever: Carbon Steel
- Ball seat: Delrin® (POM)
- O-rings: FKM (Viton®)

Standard Connections Styles / Sizes
- 3000 PSI (code 61) SAE flange bore patterns
- 6000 PSI (code 62) SAE flange bore patterns
- Metric ISO and unified coarse (UNC) threads

Pressure Range
- Pressure range: up to 420 bar / 6000 PSI (depending on size and material combination of the ball valve)

Please note: The final maximum working pressure is determined by flange and pipe/tubing rating.

Temperature Range
- Operating temperature range: -20 °C ... +100 °C / -4 °F ... + 212 °F

Options / Accessories
- Flanges and flange kits (see catalogue STAUFF Flanges)
- Alternative lever designs/materials (see page 114)
- Locking devices (see pages 115-117)
- Actuator packages (see page 118)
- Limit switches (see page 118)
- Special ball seat and O-ring materials available for lower/higher temperatures and more aggressive media
- Seal kits

Order Codes

KHZ	-	2	-	C3	08	M	-	0	0	0	1	-	M	-	-
①		②		③	④	⑤		⑥	⑦	⑧	⑨		⑩	⑪	⑫

① Type

High-Pressure Compact Block Body Ball Valve	KHZ

② Number of Ports

Two Ports (Two-Way Ball Valve)	2

③ Connection Style

3000 PSI (code 61) SAE Flange Bore Patterns	C3
6000 PSI (code 62) SAE Flange Bore Patterns	C6

Please contact STAUFF for alternative connection styles.

④ Connection Size

STAUFF Size (according to dimension table):

08	12	16	20	24	32

Please contact STAUFF for alternative connection sizes.

⑤ Thread Type

Flange Connection with Metric ISO Threads	M
Flange Connection with Unified Coarse (UNC) Threads	U

⑥ Body Material / Surface Finishing

Carbon Steel, zinc/iron-plated	0

Alternative materials / surface finishings are available upon request. Contact STAUFF for further information.

⑦ Ball / Stem Material

Ball: Carbon Steel, hard chrome-plated Stem: Carbon Steel	0

Alternative materials / surface finishings are available upon request. Contact STAUFF for further information.

⑧ Ball Seat Material

Delrin® (POM)	0

Alternative materials are available upon request. Contact STAUFF for further information.

⑨ O-Ring Material

NBR (Buna-N®)	0
FKM (Viton®)	1

Alternative materials are available upon request. Contact STAUFF for further information.

⑩ Manufacturing Code

Manufacturing code for all connection styles	M

⑪ Lever Options

Supplied with standard lever (according to table)	—
Supplied without lever	0

Alternative levers can be ordered separately. Please see page 114 for further information.

⑫ Accessories / Options

Supplied without accessories	—

Please see page 115-119 for further information and options.

High-Pressure Block Body Ball Valve ▪ Type KHZ-2-C3
3000 PSI SAE Flange Connection (ISO 6162-1)

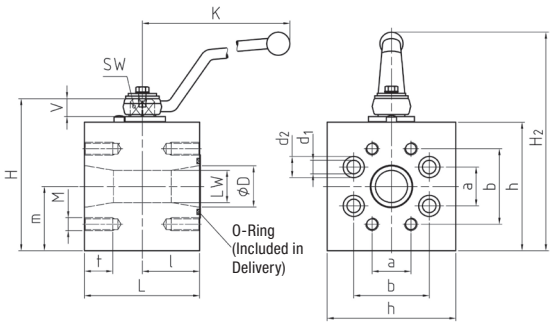

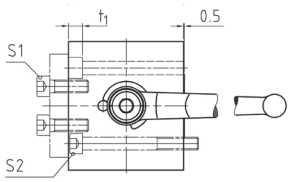

When ordering the standard option as indicated in the table below, the following materials will be supplied:

- Body, ball and stem: Carbon Steel
- Lever: Carbon Steel
- Ball seat: Delrin® (POM)
- O-rings: FKM (Viton®)

3000 PSI Series (Code 61) ▪ Metric ISO Threads

STAUFF Size	Flange Size	Nominal Size DN	Dimensions (mm/in) LW	D	L	l	H	h	m	K	SW	V	a	b	M	t	d1	d2	t1	H2	Nom. Pressure (bar/PSI)	Weight (kg/lbs)	Order Codes (Standard Option)
08	1/2	13	13	13	68	34	72	58	30	115	9	11	17,5	38,1	M8	15	8,5	13,5	9	109	350	1,80	KHZ-2-C308M-0001-M
			.51	.51	2.68	1.34	2.83	2.28	1.18	4.53	.35	.43	.69	1.50		.59	.33	.53	.35	4,29	5000	3.96	
12	3/4	20	20	20	70	35	93	75	37,5	170	14	14	22,3	47,6	M10	17	10,5	16,5	11	146	350	2,80	KHZ-2-C312M-0001-M
			.79	.79	2.76	1.38	3.66	2.95	1.48	6.69	.55	.55	.88	1.87		.67	.41	.65	.43	5,75	5000	6.16	
16	1	25	25	25	78	39	103	84,5	44	170	14	14	26,2	52,4	M10	17	10,5	16,5	11	155	320	3,90	KHZ-2-C316M-0001-M
			.98	.98	3.07	1.54	4.06	3.33	1.73	6.69	.55	.55	1.03	2.06		.67	.41	.65	.43	6,10	4600	8.58	
20	1-1/4	32	25	32	90	45	118,5	100	50	170	14	14	30,2	58,7	M10	21	10,5	16,5	11	171	280	6,50	KHZ-2-C320M-0001-M
			.98	1.26	3.54	1.77	4.67	3.94	1.97	6.69	.55	.55	1.19	2.31		.83	.41	.65	.43	6,73	4000	14.30	
24	1-1/2	40	32	38	99	49,5	141,5	120	60	306	17	17	35,7	69,9	M12	21	13	19	13	206	210	10,50	KHZ-2-C324M-0001-M
			1.26	1.50	3.90	1.95	5.57	4.72	2.36	12.05	.67	.67	1.41	2.75		.83	.51	.75	.51	8,11	3046	23.10	
32	2	50	38	49	120	60	158,5	137,5	70	306	17	17	42,9	77,8	M12	21	13	19	13	223	210	16,50	KHZ-2-C332M-0001-M
			1.50	1.93	4.72	2.36	6.24	5.41	2.76	12.05	.67	.67	1.69	3.06		.83	.51	.75	.51	8,78	3046	36.30	

Dimensions and design for stainless steel may vary.

3000 PSI Series (Code 61) ▪ Unified Coarse (UNC) Threads

STAUFF Size	Flange Size	Nominal Size DN	Dimensions (mm/in) LW	D	L	l	H	h	m	K	SW	V	a	b	M	t	d1	d2	t1	H2	Nom. Pressure (bar/PSI)	Weight (kg/lbs)	Order Codes (Standard Option)
08	1/2	13	13	13	68	34	72	58	30	115	9	11	17,5	38,1	5/16–18 UNC	15	8,5	13,5	9	109	350	1,80	KHZ-2-C308U-0001-M
			.51	.51	2.68	1.34	2.83	2.28	1.18	4.53	.35	.43	.69	1.50		.59	.33	.53	.35	4,29	5000	3.96	
12	3/4	20	20	20	70	35	93	75	37,5	170	14	14	22,3	47,6	3/8–16 UNC	17	10,5	16,5	11	146	350	2,80	KHZ-2-C312U-0001-M
			.79	.79	2.76	1.38	3.66	2.95	1.48	6.69	.55	.55	.88	1.87		.67	.41	.65	.43	5,75	5000	6.16	
16	1	25	25	25	78	39	103	84,5	44	170	14	14	26,2	52,4	3/8–16 UNC	17	10,5	16,5	11	155	320	3,90	KHZ-2-C316U-0001-M
			.98	.98	3.07	1.54	4.06	3.33	1.73	6.69	.55	.55	1.03	2.06		.67	.41	.65	.43	6,10	4600	8.58	
20	1-1/4	32	25	32	90	45	118,5	100	50	170	14	14	30,2	58,7	7/16–14 UNC	21	10,5	16,5	11	171	280	6,50	KHZ-2-C320U-0001-M
			.98	1.26	3.54	1.77	4.67	3.94	1.97	6.69	.55	.55	1.19	2.31		.83	.41	.65	.43	6,73	4000	14.30	
24	1-1/2	40	32	38	99	49,5	141,5	120	60	306	17	17	35,7	69,9	1/2–13 UNC	21	13	19	13	206	210	10,50	KHZ-2-C324U-0001-M
			1.26	1.50	3.90	1.95	5.57	4.72	2.36	12.05	.67	.67	1.41	2.75		.83	.51	.75	.51	8,11	3046	23.10	
32	2	50	38	49	120	60	158,5	137,5	70	306	17	17	42,9	77,8	1/2–13 UNC	21	13	19	13	223	210	16,50	KHZ-2-C332U-0001-M
			1.50	1.93	4.72	2.36	6.24	5.41	2.76	12.05	.67	.67	1.69	3.06		.83	.51	.75	.51	8,78	3046	36.30	

Dimensions and design for stainless steel may vary.

Recommended Bolts and O-Rings

STAUFF Size	Nominal Size DN	Recommendations Bolt S1 (min)	Bolt S2 (min)	O-ring (Included in Delivery)
08	13	M8 x 30 - 10.9	M8 x 70 - 10.9	18,64 x 3,53
		5/16–18 UNC x 1-1/4 - Gr. 8	5/16–18 UNC x 2-3/4 - Gr. 8	
12	20	M10 x 30 - 10.9	M10 x 80 - 10.9	24,99 x 3,53
		3/8–16 UNC x 1-1/4 - Gr. 8	3/8–16 UNC x 3-1/4 - Gr. 8	
16	25	M10 x 30 - 10.9	M10 x 80 - 10.9	32,92 x 3,53
		3/8–16 UNC x 1-1/4 - Gr. 8	3/8–16UNC x 3-1/4 - Gr. 8	
20	32	M10 x 30 - 10.9	M10 x 90 - 10.9	37,69 x 3,53
		7/16–14 UNC x 1-1/4 - Gr. 8	7/16–14 UNC x 3-1/2 - Gr. 8	
24	40	M12 x 35 - 10.9	M12 x 100 - 10.9	47,22 x 3,53
		1/2–13 UNC x 1-1/2 - Gr. 8	1/2–13 UNC x 4 - Gr. 8	
32	50	M12 x 35 - 10.9	M12 x 120 - 10.9	56,74 x 3,53
		1/2–13 UNC x 1-1/2 - Gr. 8	1/2–13 UNC x 4-3/4 - Gr. 8	

Please note: The final maximum working pressure is determined by flange and pipe/tubing rating.

Flanges and bolts are not included in delivery.

Dimensions and design for stainless steel may vary.

A

High-Pressure Block Body Ball Valve ▪ Type KHZ-2-C6
6000 PSI SAE Flange Connection (ISO 6162-2)

When ordering the standard option as indicated in the table below, the following materials will be supplied:

- Body, ball and stem: Carbon Steel
- Lever: Carbon Steel
- Ball seat: Delrin® (POM)
- O-rings: FKM (Viton®)

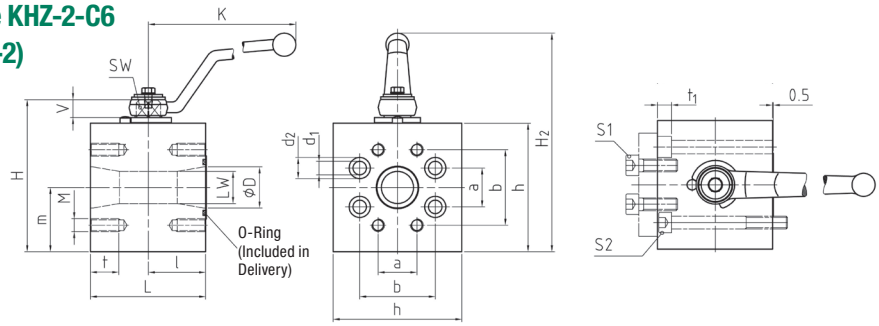

6000 PSI Series (Code 62) ▪ Metric ISO Threads

STAUFF Size	Flange Size	Nominal Size DN	Dimensions (mm/in) LW	D	L	l	H	h	m	K	SW	V	a	b	M	t	d1	d2	t1	H2	Nom. Pressure (bar/PSI)	Weight (kg/lbs)	Order Codes (Standard Option)
08	1/2	13	13	13	68	34	72	58	30	115	9	11	18,2	40,5	M8	15	8,5	13,5	9	109	420	1,80	KHZ-2-C608M-0001-M
			.51	.51	2.68	1.34	2.83	2.28	1.18	4.53	.35	.43	.72	1.59		.59	.33	.53	.35	4.29	6000	3.96	
12	3/4	20	20	20	70	35	93	75	37,5	170	14	14	23,8	50,8	M10	17	10,5	16,5	11	146	420	2,80	KHZ-2-C612M-0001-M
			.79	.79	2.76	1.38	3.66	2.95	1.48	6.69	.55	.55	.94	2.00		.67	.41	.65	.43	5.75	6000	6.16	
16	1	25	25	25	78	39	103	84,5	44	170	14	14	27,8	57,2	M12	21	13	19	13	155	420	3,90	KHZ-2-C616M-0001-M
			.98	.98	3.07	1.54	4.06	3.33	1.73	6.69	.55	.55	1.09	2.25		.83	.51	.75	.51	6.10	6000	8.58	
20	1-1/4	32	25	32	90	45	118,5	100	50	170	14	14	31,8	66,6	M12	20	13	19	13	171	420	6,50	KHZ-2-C620M-0001-M
			.98	1.26	3.54	1.77	4.67	3.94	1.97	6.69	.55	.55	1.25	2.62		.79	.51	.75	.51	6.73	6000	14.30	
24	1-1/2	40	32	38	99	49,5	141,5	120	60	306	17	17	36,5	79,3	M16	26	17	25	17,5	206	420	10,50	KHZ-2-C624M-0001-M
			1.26	1.50	3.90	1.95	5.57	4.72	2.36	12.05	.67	.67	1.44	3.12		1.02	.67	.98	.69	8.11	6000	23.10	
32	2	50	38	49	120	60	158,5	137,5	70	306	17	17	44,5	96,8	M20	34	21	31	21,5	223	420	16,50	KHZ-2-C632M-0001-M
			1.50	1.93	4.72	2.36	6.24	5.41	2.76	12.05	.67	.67	1.75	3.81		1.34	.83	1.22	.85	8.78	6000	36.30	

Dimensions and design for stainless steel may vary.

6000 PSI Series (Code 62) ▪ Unified Coarse (UNC) Threads

STAUFF Size	Flange Size	Nominal Size DN	Dimensions (mm/in) LW	D	L	l	H	h	m	K	SW	V	a	b	M	t	d1	d2	t1	H2	Nom. Pressure (bar/PSI)	Weight (kg/lbs)	Order Codes (Standard Option)
08	1/2	13	13	13	68	34	72	58	30	115	9	11	18,2	40,5	5/16–18 UNC	15	8,5	13,5	9	109	420	1,80	KHZ-2-C608U-0001-M
			.51	.51	2.68	1.34	2.83	2.28	1.18	4.53	.35	.43	.72	1.59		.59	.33	.53	.35	4.29	6000	3.96	
12	3/4	20	20	20	70	35	93	75	37,5	170	14	14	23,8	50,8	3/8–16 UNC	17	10,5	16,5	11	146	420	2,80	KHZ-2-C612U-0001-M
			.79	.79	2.76	1.38	3.66	2.95	1.48	6.69	.55	.55	.94	2.00		.67	.41	.65	.43	5.75	6000	6.16	
16	1	25	25	25	78	39	103	84,5	44	170	14	14	27,8	57,2	7/16–14 UNC	21	13	19	13	155	420	3,90	KHZ-2-C616U-0001-M
			.98	.98	3.07	1.54	4.06	3.33	1.73	6.69	.55	.55	1.09	2.25		.83	.51	.75	.51	6.10	6000	8.58	
20	1-1/4	32	25	32	90	45	118,5	100	50	170	14	14	31,8	66,6	1/2–13 UNC	20	13	19	13	171	420	6,50	KHZ-2-C620U-0001-M
			.98	1.26	3.54	1.77	4.67	3.94	1.97	6.69	.55	.55	1.25	2.62		.79	.51	.75	.51	6.73	6000	14.30	
24	1-1/2	40	32	38	99	49,5	141,5	120	60	306	17	17	36,5	79,3	5/8–11 UNC	26	17	25	17,5	206	420	10,50	KHZ-2-C624U-0001-M
			1.26	1.50	3.90	1.95	5.57	4.72	2.36	12.05	.67	.67	1.44	3.12		1.02	.67	.98	.69	8.11	6000	23.10	
32	2	50	38	49	120	60	158,5	137,5	70	306	17	17	44,5	96,8	3/4–10 UNC	34	21	31	21,5	223	420	16,50	KHZ-2-C632U-0001-M
			1.50	1.93	4.72	2.36	6.24	5.41	2.76	12.05	.67	.67	1.75	3.81		1.34	.83	1.22	.85	8.78	6000	36.30	

Dimensions and design for stainless steel may vary.

Recommended Bolts and O-Rings

STAUFF Size	Nominal Size DN	Recommendations Bolt S1 (min)	Bolt S2 (min)	O-ring (Included in Delivery)
08	13	M8 x 30 - 10.9	M8 x 70 - 10.9	18,64 x 3,53
		5/16–18 UNC x 1-1/4 - Gr. 8	5/16–18 UNC x 2-3/4 - Gr. 8	
12	20	M10 x 35 - 12.9	M10 x 80 - 12.9	24,99 x 3,53
		3/8–16UNC x 1-1/2 - Gr. 10	3/8–16UNC x 3-1/4 - Gr. 10	
16	25	M12 x 45 - 10.9	M12 x 80 - 10.9	32,92 x 3,53
		7/16–14 UNC x 1-3/4 - Gr. 8	7/16–14 UNC x 3-1/4 - Gr. 8	
20	32	M12 x 45 - 10.9	M12 x 90 - 10.9	37,69 x 3,53
		7/16–14 UNC x 1-3/4 - Gr. 8	7/16–14 UNC x 3-1/2 - Gr. 8	
24	40	M16 x 55 - 10.9	M16 x 100 - 10.9	47,22 x 3,53
		5/8–11 UNC x 2-1/4- Gr. 8	5/8–11 UNC x 4- Gr. 8	
32	50	M20 x 70 - 10.9	M20 x 130 - 10.9	56,74 x 3,53
		3/4–10 UNC x 2-3/4 - Gr. 8	3/4–10 UNC x 5-1/4 - Gr. 8	

Please note: The final maximum working pressure is determined by flange and pipe/tubing rating.

Flanges and bolts are not included in delivery.

Dimensions and design for stainless steel may vary.

A

High-Pressure Block Body Ball Valve ▪ Type MBBV-2

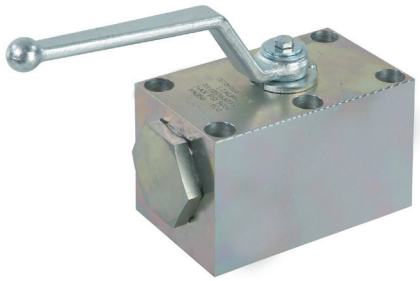

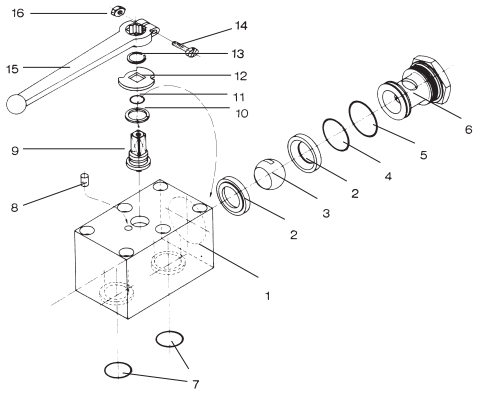

List of Components

No.	Qty.	Description
1	1	Body
2*	2	Seats
3	1	Ball
4*	1	O-Ring
5*	1	O-Ring
6	1	Tube Connector
7*	2	O-Ring
8	1	Stop Pin
9	1	Stem
10*	1	Thrust Ring
11*	1	O-Ring and Thrust Ring
12	1	Cam Plate
13	1	Snap Ring
14	1	Clamping Screw
15	1	Handle
16	1	Clamping Nut

Characteristics

Two-way high-pressure block body ball valves designed for use as on/off devices for hydraulic applications

Standard Construction
- Block body design for manifold mounting
- Improved manifold design eliminates external piping and connectors
- Supplied with lever

Standard Materials
- Body: Carbon Steel, zinc/iron-plated
- Ball: Carbon Steel, hard chrome-plated
- Stem: Carbon Steel
- Lever: Zinc (STAUFF Sizes 04 to 08)
  Carbon Steel (STAUFF Sizes 12 to 32)
- Ball seat: Delrin® (POM)
- O-rings: FKM (Viton®)

Standard Connections Styles / Sizes
- Manifold mounting
- Either 4 or 6 mounting holes for added safety (bolts are not included in delivery)

Pressure Range
- Pressure range: up to 500 bar / 7250 PSI (depending on size and material combination of the ball valve)

Temperature Range
- Operating temperature range:
  -20 °C ... +100 °C / -4 °F ... + 212 °F

Options / Accessories
- Three-way version with 90° operation (see pages 52-53)
- Three-way version with 180° operation (see pages 54-55)
- Alternative lever designs/materials (see page 114)
- Locking devices (see pages 115-117)
- Actuator packages (see page 118)
- Limit switches (see page 118)
- Stainless Steel body
- Stainless Steel ball and stem
- Special ball seat and O-ring materials available for lower/higher temperatures and more aggressive media
- Seal kits (including items marked by * in the above list)

Order Codes

M	BBV	-	2	-	08	-	0	0	0	1	-	M	-	-
①	②		③		④		⑤	⑥	⑦	⑧		⑨	⑩	⑪

① Connection Style

Manifold Mounting	M

② Type

High-Pressure Block Body Ball Valve	BBV

③ Number of Ports

Two Ports (Two-Way Ball Valve)	2

④ Connection Size

STAUFF Size (according to dimension table):

04	06	08	12	16	20	24	32

Please contact STAUFF for alternative connection sizes.

⑤ Body Material / Surface Finishing

Carbon Steel, zinc/iron-plated	0
Stainless Steel V4A (AISI 316Ti)	1

Note: Stainless steel version may vary in dimensions and design.
Alternative materials / surface finishings are available upon request. Contact STAUFF for further information.

⑥ Ball / Stem Material

Ball: Carbon Steel, hard chrome-plated Stem: Carbon Steel	0
Ball / Stem: Stainless Steel V4A (AISI 316Ti)	1

Alternative materials / surface finishings are available upon request. Contact STAUFF for further information.

⑦ Ball Seat Material

Delrin® (POM)	0
PEEK	G
Delrin® (POM) with Protection Ring against Erosion	H

Alternative materials are available upon request. Contact STAUFF for further information.

⑧ O-Ring Material

NBR (Buna-N®)	0
FKM (Viton®)	1
EPDM	3
NBR (Buna-N®) for Low-Temperature Applications	X

Alternative materials are available upon request. Contact STAUFF for further information.

⑨ Manufacturing Code

Manufacturing code for all connection styles	M

⑩ Lever Options

Supplied with standard lever (according to table)	—
Supplied without lever	0

Alternative levers can be ordered separately. Please see page 114 for further information.

⑪ Accessories / Options

Supplied without accessories	—
Supplied with Locking Device LD1	LD1
Supplied with Locking Device LD4	LD4

Please see page 115-119 for further information and options.

A

High-Pressure Block Body Ball Valve ▪ Type MBBV-2
Manifold Mounting

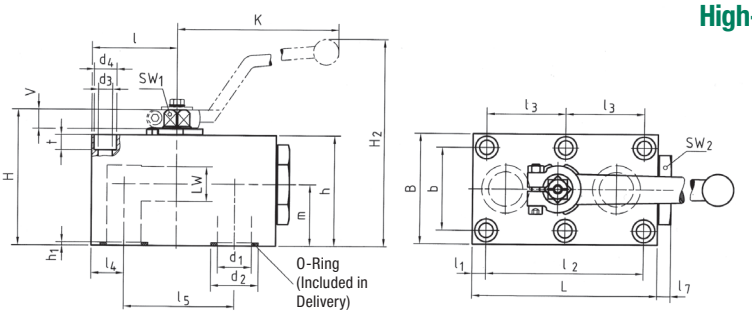

When ordering the standard option as indicated in the table below, the following materials will be supplied:

- Body, ball and stem: Carbon Steel
- Lever: Zinc (STAUFF Sizes 04 to 08)
  Carbon Steel (STAUFF Sizes 12 to 32)
- Ball seat: Delrin® (POM)
- O-rings: FKM (Viton®)

STAUFF Size	Nominal Size DN	Dimensions (mm/in) l	l1	l2	l3	l4	l5	l7	L	B	b	H	h	m	V	SW1	SW2	K	LW	H2	d1	d2	h1	Nom. Pressure (bar/PSI)	Weight (kg/lbs)	Order Codes (Standard Option)
04	6	26	8,5	35		8,5	35	6	57	40	27	43	35	19,5	6	7	19	80	6	67	6	11,8	1,9	500	0,60	MBBV-2-04-0001-M
		1.02	.33	1.38		.33	1.38	.24	2.24	1.57	1.06	1.69	1.38	.77	.24	.28	.75	3.15	.24	2.64	.24	.46	.07	7250	1.32	
06	10	29	7,5	55		10	44	10	70	55	40	59	45	24,5	11	9	30	115	10	93	9,5	14,9	1,9	500	1,30	MBBV-2-06-0001-M
		1.14	.30	2.17		.39	1.73	.39	2.76	2.17	1.57	2.32	1.77	.96	.43	.35	1.18	4.53	.39	3.66	.37	.59	.07	7250	2.86	
08	13	42,5	7,5	83	41,5	16	58	10	98	60	45	69	55	34	11	9	32	115	13	104	13	24,9	1,9	420	2,20	MBBV-2-08-0001-M
		1.67	.30	3.27	1.63	.63	2.28	.39	3.86	2.36	1.77	2.72	2.17	1.34	.43	.35	1.26	4.53	.51	4.09	.51	.98	.07	6000	4.84	
12	20	51	10	97	48,5	20	69	10	117	70	51	88	70	37,5	14	14	46	171	20	139	20	29	2	420	3,90	MBBV-2-12-0001-M
		2.01	.39	3.82	1.91	.79	2.72	.39	4.61	2.76	2.01	3.46	2.76	1.48	.55	.55	1.81	6.73	.79	5.47	.79	1.14	.08	6000	8.58	
16	25	62	10	115	57,5	24	81	10	135	80	60	98	80	44,5	14	14	50	171	25	149	25	34,9	2,3	420	5,65	MBBV-2-16-0001-M
		2.44	.39	4.53	2.26	.94	3.19	.39	5.31	3.15	2.36	3.86	3.15	1.75	.55	.55	1.97	6.73	.98	5.87	.98	1.37	.09	6000	12.43	
20	32	75	12	136	68	29	96	10	165	100	78	121	100	54,5	17	17	65	306	32	192	32	40	2	420	11,10	MBBV-2-20-0001-M
		2.95	.47	5.35	2.68	1.14	3.78	.39	6.50	3.94	3.07	4.76	3.94	2.15	.67	.67	2.56	12.05	1.26	7.56	1.26	1.57	.08	6000	24.42	
24	40	84,5	28,5	112	56	28,5	112	17	200	130	95	131	110	57	17	17	80	306	38	202	38	47,7	2,3	420	19,00	MBBV-2-24-0001-M
		3.33	1.12	4.41	2.20	1.12	4.41	.67	7.87	5.12	3.74	5.16	4.33	2.24	.67	.67	3.15	12.05	1.50	7.95	1.50	1.88	.09	6000	41.80	
32	50	106	38	136	68	38	136	15	240	150	112	150	129	71	17	17	90	306	48	221	48	59,8	2,3	420	29,30	MBBV-2-32-0001-M
		4.17	1.50	5.35	2.68	1.50	5.35	.59	9.45	5.91	4.41	5.91	5.08	2.80	.67	.67	3.54	12.05	1.89	8.70	1.89	2.35	.09	6000	64.46	

Dimensions and design for stainless steel may vary.

Recommended Bolts, Tightening Torques and O-Rings

STAUFF Size	Nominal Size DN	Recommendations Bolt (min)	Dimensions (mm/in) d3	d4	t	Tightening Torque	O-Ring (Included in Delivery)
04	6	4 x M6 x 40 - 8.8	6,5	10,5	6,8	9 N·m	7x2,5
		4 x 1/4–20 x 1-1/2 UNC - Gr. 5	.26	.41	.27	10 ft·lb	
06	10	4 x M8 x 50 - 8.8	8,4	13,5	8,5	21 N·m	10x2,5
		4 x 5/16–18 x 2-1/2 UNC - Gr. 5	.33	.53	.33	10 ft·lb	
08	13	6 x M8 x 60 - 10.9	8,4	13,5	7	30 N·m	20x2,5
		6 x 5/16–18 x 2-1/2 UNC - Gr. 8	.33	.53	.28	29 ft·lb	
12	20	6 x M10 x 80 - 10.9	10,5	16,5	10,5	60 N·m	23,47x2,62
		6 x 3/8–16 x 3-1/4 UNC - Gr. 10	.41	.65	.41	58 ft·lb	
16	25	6 x M10 x 90 - 12.9	10,5	16,5	10,5	70 N·m	29x3
		6 x 3/8–16 x 3-1/2 UNC - Gr. 10	.41	.65	.41	58 ft·lb	
20	32	6 x M12 x 110 - 10.9	13	19	12	100 N·m	34,59x2,62
		6 x 7/16–14 x 4-1/2 UNC - Gr. 8	.51	.75	.47	70 ft·lb	
24	40	6 x M16 x 120 - 12.9	16,5	25	19	300 N·m	42x3
		6 x 5/8–11 x 5 UNC - Gr. 8	.65	.98	.75	170 ft·lb	
32	50	6 x M20 x 140 - 10.9	21	31	21,5	600 N·m	54x3
		6 x 3/4–10 x 5-1/2 UNC - Gr. 8	.83	1.22	.85	200 ft·lb	

Please note: Bolts are not included in delivery.

We recommend to use socket cap screws according to ISO 4762 or ANSI / ASME B18.3 for installation.

Dimensions and design for stainless steel may vary.

High-Pressure Block Body Ball Valve for Manifold Mounting — 51-52
Pressure inlet only from the center port

MCBVL-3	90° Operation	52

High-Pressure Block Body Ball Valve for Manifold Mounting — 53-54
Pressure inlet possible from all ports

MCBVSL-3	180° Operation	54

High-Pressure Block Body Ball Valve — 56-59
L-Bore Three-Way Selector
Pressure inlet only from the center port

CBVL-3-G	Female BSP Thread	57
CBVL-3-N	Female NPT Thread	57
CBVL-3-U	Female UN/UNF Thread	58
CBVL-3-L/S	24° Cone Connection	59

High-Pressure Block Body Ball Valve — 60-63
T-Bore Three-Way Selector
Pressure inlet only from the center port

CBVT-3-G	Female BSP Thread	61
CBVT-3-N	Female NPT Thread	61
CBVT-3-U	Female UN/UNF Thread	62
CBVT-3-L/S	24° Cone Connection	63

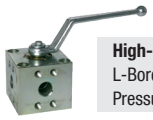

High-Pressure Block Body Ball Valve — 64-65
L-Bore Three-Way Selector
Pressure inlet only from the center port

CBVL-3-C	SAE Flange Connection 6000 PSI Series (ISO 6162-2)	65

High-Pressure Block Body Ball Valve 66-69
L-Bore Three-Way Selector
Pressure inlet possible from all ports

CBVSL-3-G	Female BSP Thread	67
CBVSL-3-N	Female NPT Thread	67
CBVSL-3-U	Female UN/UNF Thread	68
CBVSL-3-L/S	24° Cone Connection	69

High-Pressure Block Body Ball Valve 70-73
T-Bore Three-Way Selector
Pressure inlet possible from all ports

CBVST-3-G	Female BSP Thread	71
CBVST-3-N	Female NPT Thread	71
CBVST-3-U	Female UN/UNF Thread	72
CBVST-3-L/S	24° Cone Connection	73

High-Pressure Block Body Ball Valve 74-77
L-Bore Three-Way Selector
Pressure inlet possible from all ports

LBV-3-G	Female BSP Thread	75
LBV-3-N	Female NPT Thread	75
LBV-3-U	Female UN/UNF Thread	76
LBV-3-L/S	24° Cone Connection	77

High-Pressure Block Body Ball Valve 78-81
T-Bore Three-Way Selector
Pressure inlet possible from all ports

TBV-3-G	Female BSP Thread	79
TBV-3-N	Female NPT Thread	79
TBV-3-U	Female UN/UNF Thread	80
TBV-3-L/S	24° Cone Connection	81

High-Pressure Block Body Ball Valve 82-85
T-Bore Four-Four Selector
Pressure inlet possible from all ports

TBV-4-G	Female BSP Thread	83
TBV-4-N	Female NPT Thread	83
TBV-4-U	Female UN/UNF Thread	84
TBV-4-L/S	24° Cone Connection	85

High-Pressure Block Body Ball Valve 86-89
Double L-Bore Four-Way Selector
Pressure inlet possible from all ports

XBV-4-G	Female BSP Thread	87
XBV-4-N	Female NPT Thread	87
XBV-4-U	Female UN/UNF Thread	88
XBV-4-L/S	24° Cone Connection	89

B

B

High-Pressure Block Body Ball Valve ▪ Type MCBVL-3

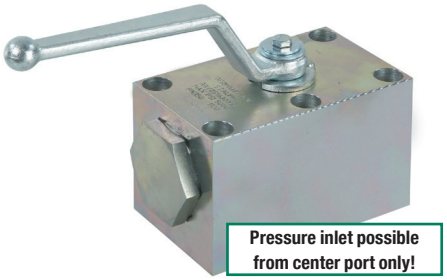

Characteristics

Three-way high-pressure block body ball valves designed for use as three-way selectors (L-bore, 90° operation) for hydraulic applications

Standard Construction
- Block body design for manifold mounting
- Improved manifold design eliminates external piping and connectors
- Supplied with lever

Standard Materials
- Body: Carbon Steel, zinc/iron-plated
- Ball: Carbon Steel, hard chrome-plated
- Stem: Carbon Steel
- Lever: Zinc (STAUFF Sizes 04 to 08)
  Carbon Steel (STAUFF Sizes 20 to 12)
- Ball seat: Delrin® (POM)
- O-rings: FKM (Viton®)

Standard Connections Styles / Sizes
- Manifold mounting
- Either 4 or 6 mounting holes for added safety (bolts are not included in delivery)

Pressure inlet only from the center port!

Pressure Range
- Pressure range: up to 500 bar / 7250 PSI (depending on size and material combination of the ball valve)

Temperature Range
- Operating temperature range:
  -20 °C ... +100 °C / -4 °F ... + 212 °F

Options / Accessories
- Alternative lever designs/materials (see page 114)
- Locking devices (see pages 115-117)
- Actuator packages (see page 118)
- Limit switches (see page 118)
- Stainless Steel body
- Stainless Steel ball and stem
- Special ball seat and O-ring materials available for lower/higher temperatures and more aggressive media

Porting Pattern
- Symbol : LLU
- Overlap: negative
- Operating: 90°

P58

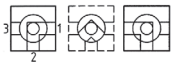

- Stop of end position:

Order Codes

M	CBVL	-	3	-	08	-	0	0	0	1	-	M	-	-
①	②		③		④		⑤	⑥	⑦	⑧		⑨	⑩	⑪

① Connection Style

Manifold Mounting	**M**

② Type

Compact High-Pressure Block Body Ball Valve	**CBVL**

③ Number of Ports

Three Ports (Three-Way Ball Valve)	**3**

④ Connection Size

STAUFF Size (according to dimension table):

04	**06**	**08**	**12**	**16**	**20**	**24**	**32**

Please contact STAUFF for alternative connection sizes.

⑤ Body Material / Surface Finishing

Carbon Steel, zinc/iron-plated	**0**
Stainless Steel V4A (AISI 316Ti)	**1**

Note: Stainless steel version may vary in dimensions and design.
Alternative materials / surface finishings are available upon request. Contact STAUFF for further information.

⑥ Ball / Stem Material

Ball: Carbon Steel, hard chrome-plated Stem: Carbon Steel	**0**
Ball / Stem: Stainless Steel V4A (AISI 316Ti)	**1**

Alternative materials / surface finishings are available upon request. Contact STAUFF for further information.

⑦ Ball Seat Material

Delrin® (POM)	**0**
PEEK	**G**
Delrin® (POM) with Protection Ring against Erosion	**H**

Alternative materials are available upon request. Contact STAUFF for further information.

⑧ O-Ring Material

NBR (Buna-N®)	**0**
FKM (Viton®)	**1**
EPDM	**3**
NBR (Buna-N®) for Low-Temperature Applications	**X**

Alternative materials are available upon request. Contact STAUFF for further information.

⑨ Manufacturing Code

Manufacturing code for all connection styles	**M**

⑩ Lever Options

Supplied with standard lever (according to table)	**—**
Supplied without lever	**0**

Alternative levers can be ordered separately. Please see page 114 for further information.

⑪ Accessories / Options

Supplied without accessories	**—**
Supplied with Locking Device LD1	**LD1**
Supplied with Locking Device LD4	**LD4**

Please see page 115-119 for further information and options.

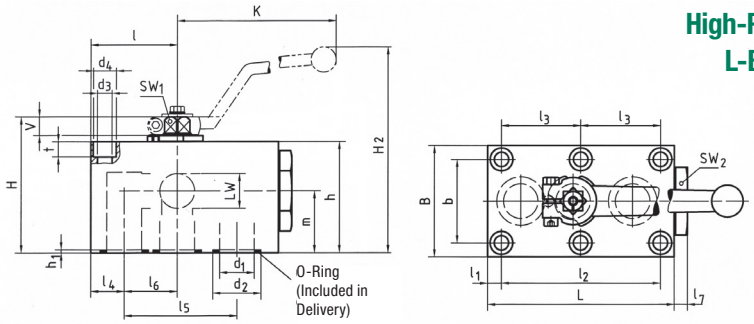

High-Pressure Block Body Ball Valve ▪ Type MCBVL-3
L-Bore Three-Way Selector for Manifold Mounting

When ordering the standard option as indicated in the table below, the following materials will be supplied:

- Body, ball and stem: Carbon Steel
- Lever: Zinc (STAUFF Sizes 04 to 08)
  Carbon Steel (STAUFF Sizes 12 to 32)
- Ball seat: Delrin® (POM)
- O-rings: FKM (Viton®)

B

Pressure Inlet only from the Center Port ▪ 90° Operation

STAUFF Size	Nominal Size DN	Dimensions (mm/in) l	l1	l2	l3	l4	l5	l6	l7	L	B	b	H	h	m	V	SW1	SW2	K	LW	H2	d1	d2	h1	Nom. Pressure (bar/PSI)	Weight (kg/lbs)	Order Codes (Standard Option)
04	6	26	8,5	35		8,5	35	17,5	6	57	40	27	43	35	19,5	6	7	19	80	6	67	6	11,8	1,9	500	0,60	MCBVL-3-04-0001-M
		1.02	.33	1.38		.33	1.38	.69	.24	2.24	1.57	1.06	1.69	1.38	.77	.24	.28	.75	3.15	.24	2.64	.24	.46	.07	7250	1.32	
06	10	29	7,5	55		10	44	19	10	70	55	40	59	45	24,5	11	9	30	115	10	93	9,5	14,9	1,9	500	1,30	MCBVL-3-06-0001-M
		1.14	.30	2.17		.39	1.73	.75	.39	2.76	2.17	1.57	2.32	1.77	.96	.43	.35	1.18	4.53	.39	3.66	.37	.59	.07	7250	2.86	
08	13	42,5	7,5	83	41,5	16	58	26,5	10	98	60	45	69	55	34	11	9	32	115	13	104	13	24,9	1,9	420	2,20	MCBVL-3-08-0001-M
		1.67	.30	3.27	1.63	.63	2.28	1.04	.39	3.86	2.36	1.77	2.72	2.17	1.34	.43	.35	1.26	4.53	.51	4.09	.51	.98	.07	6000	4.84	
12	20	51	10	97	48,5	20	69	31,5	10	117	70	51	88	70	37,5	14	14	46	171	20	139	20	29	2	420	3,90	MCBVL-3-12-0001-M
		2.01	.39	3.82	1.91	.79	2.72	1.24	.39	4.61	2.76	2.01	3.46	2.76	1.48	.55	.55	1.81	6.73	.79	5.47	.79	1.14	.08	6000	8.58	
16	25	62	10	115	57,5	24	81	38	10	135	80	60	98	80	44,5	14	14	50	171	25	149	25	34,9	2,3	420	5,65	MCBVL-3-16-0001-M
		2.44	.39	4.53	2.26	.94	3.19	1.50	.39	5.31	3.15	2.36	3.86	3.15	1.75	.55	.55	1.97	6.73	.98	5.87	.98	1.37	.09	6000	12.43	
20	32	75	12	136	68	29	96	46	10	165	100	78	121	100	54,5	16,5	17	65	306	32	192	32	40	2	420	11,10	MCBVL-3-20-0001-M
		2.95	.47	5.35	2.68	1.14	3.78	1.81	.39	6.50	3.94	3.07	4.76	3.94	2.15	.65	.67	2.56	12.05	1.26	7.56	1.26	1.57	.08	6000	24.42	
24	40	84,5	28,5	112	56	28,5	112	56	17	200	130	95	131	110	57	16,5	17	80	306	38	202	38	47,7	2,3	420	19,00	MCBVL-3-24-0001-M
		3.33	1.12	4.41	2.20	1.12	4.41	2.20	.67	7.87	5.12	3.74	5.16	4.33	2.24	.65	.67	3.15	12.05	1.50	7.95	1.50	1.88	.09	6000	41.80	
32	50	106	38	136	68	38	136	68	15	240	150	112	150	129	71	16,5	17	90	306	48	221	48	59,8	2,3	420	29,30	MCBVL-3-32-0001-M
		4.17	1.50	5.35	2.68	1.50	5.35	2.68	.59	9.45	5.91	4.41	5.91	5.08	2.80	.65	.67	3.54	12.05	1.89	8.70	1.89	2.35	.09	6000	64.46	

Dimensions and design for stainless steel may vary.

Recommended Bolts, Tightening Torques and O-Rings

STAUFF Size	Nominal Size DN	Recommendations Bolt (min)	Dimensions (mm/in) d3	d4	t	Tightening Torque	O-Ring (Included in Delivery)
04	6	4 x M6 x 40 - 8.8	6,5	10,5	6,8	9 N·m	7x2,5
		4 x 1/4–20 x 1-1/2 UNC - Gr. 5	.26	.41	.27	10 ft·lb	
06	10	4 x M8 x 50 - 8.8	8,4	13,5	8,5	21 N·m	10x2,5
		4 x 5/16–18 x 2-1/2 UNC - Gr. 5	.33	.53	.33	10 ft·lb	
08	13	6 x M8 x 60 - 10.9	8,4	13,5	7	30 N·m	20x2,5
		6 x 5/16–18 x 2-1/2 UNC - Gr. 8	.33	.53	.28	29 ft·lb	
12	20	6 x M10 x 80 - 10.9	10,5	16,5	10,5	60 N·m	23,47x2,62
		6 x 3/8–16 x 3-1/4 UNC - Gr. 10	.41	.65	.41	58 ft·lb	
16	25	6 x M10 x 90 - 12.9	10,5	16,5	10,5	70 N·m	29x3
		6 x 3/8–16 x 3-1/2 UNC - Gr. 10	.41	.65	.41	58 ft·lb	
20	32	6 x M12 x 110 - 10.9	13	19	12	100 N·m	34,59x2,62
		6 x 7/16–14 x 4-1/2 UNC - Gr. 8	.51	.75	.47	70 ft·lb	
24	40	6 x M16 x 120 - 12.9	16,5	25	19	300 N·m	42x3
		6 x 5/8–11 x 5 UNC - Gr. 8	.65	.98	.75	170 ft·lb	
32	50	6 x M20 x 140 - 10.9	21	31	21,5	600 N·m	54x3
		6 x 3/4–10 x 5-1/2 UNC - Gr. 8	.83	1.22	.85	200 ft·lb	

Pressure inlet only from the center port!

Please note: Bolts are not included in delivery.
We recommend to use socket cap screws according to ISO 4762 or ANSI / ASME B18.3 for installation.

Dimensions and design for stainless steel may vary.

B

High-Pressure Block Body Ball Valve ▪ Type MCBVSL-3

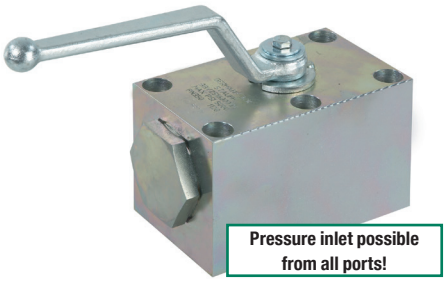

Characteristics

Three-way high-pressure block body ball valves designed for use as three-way selectors (L-bore, 180° operation) for hydraulic applications

Standard Construction
- Block body design for manifold mounting
- Improved manifold design eliminates external piping and connectors
- Supplied with lever

Standard Materials
- Body: Carbon Steel, zinc/iron-plated
- Ball: Carbon Steel, hard chrome-plated
- Stem: Carbon Steel
- Lever: Zinc (STAUFF Sizes 04 to 08)
  Carbon Steel (STAUFF Sizes 12 to 32)
- Ball seat: Delrin® (POM) Frontside Sealing
- O-rings: FKM (Viton®)

Standard Connections Styles / Sizes
- Manifold mounting
- Either 4 or 6 mounting holes for added safety (bolts are not included in delivery)

Pressure inlet possible from all ports!
Must be operated without pressure!

Pressure Range
- Pressure range: up to 500 bar / 7250 PSI (depending on size and material combination of the ball valve)

Temperature Range
- Operating temperature range:
  -20 °C ... +100 °C / -4 °F ... + 212 °F

Options / Accessories
- Alternative lever designs/materials (see page 114)
- Locking devices (see pages 115-117)
- Actuator packages (see page 118)
- Limit switches (see page 118)
- Stainless Steel body
- Stainless Steel ball and stem
- Special ball seat and O-ring materials available for lower/higher temperatures and more aggressive media

Porting Pattern
- Symbol : LU
- Overlap: positive
- Operating: 180°

P57

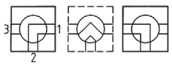

- Stop of end position:

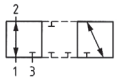

Order Codes

M	CBVSL	-	3	-	08	-	0	0	8	1	-	M	-	-
①	②		③		④		⑤	⑥	⑦	⑧		⑨	⑩	⑪

① Connection Style

Manifold Mounting	M

② Type

Compact High-Pressure Block Body Ball Valve with Pressure Inlet Possible from all Ports	CBVSL

③ Number of Ports

Three Ports (Three-Way Ball Valve)	3

④ Connection Size

STAUFF Size (according to dimension table):

04	06	08	12	16	20	24	32

Please contact STAUFF for alternative connection sizes.

⑤ Body Material / Surface Finishing

Carbon Steel, zinc/iron-plated	0
Stainless Steel V4A (AISI 316Ti)	1

Note: Stainless steel version may vary in dimensions and design.
Alternative materials / surface finishings are available upon request. Contact STAUFF for further information.

⑥ Ball / Stem Material

Ball: Carbon Steel, hard chrome-plated Stem: Carbon Steel	0
Ball / Stem: Stainless Steel V4A (AISI 316Ti)	1

Alternative materials / surface finishings are available upon request. Contact STAUFF for further information.

⑦ Ball Seat Material

Delrin® (POM) Frontside Sealing	8
PEEK	G
Delrin® (POM) with Protection Ring against Erosion	H

Alternative materials are available upon request. Contact STAUFF for further information.

⑧ O-Ring Material

NBR (Buna-N®)	0
FKM (Viton®)	1
EPDM	3
NBR (Buna-N®) for Low-Temperature Applications	X

Alternative materials are available upon request. Contact STAUFF for further information.

⑨ Manufacturing Code

Manufacturing code for all connection styles	M

⑩ Lever Options

Supplied with standard lever (according to table)	—
Supplied without lever	0

Alternative levers can be ordered separately. Please see page 114 for further information.

⑪ Accessories / Options

Supplied without accessories	—
Supplied with Locking Device LD1 (not available for SW1 = 17 mm / .71 in)	LD1S
Supplied with Locking Device LD4	LD4S

Please see page 115-119 for further information and options.

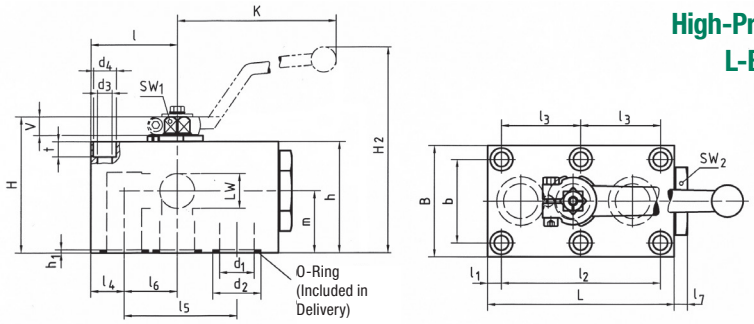

High-Pressure Block Body Ball Valve ▪ Type MCBVSL-3
L-Bore Three-Way Selector for Manifold Mounting

When ordering the standard option as indicated in the table below, the following materials will be supplied:

- Body, ball and stem: Carbon Steel
- Lever: Zinc (STAUFF Sizes 04 to 08)
  Carbon Steel (STAUFF Sizes 12 to 32)
- Ball seat: Delrin® (POM) Frontside Sealing
- O-rings: FKM (Viton®)

Pressure Inlet possible from all Ports ▪ 180° Operation

STAUFF Size	Nominal Size DN	Dimensions (mm/in) l	l1	l2	l3	l4	l5	l6	l7	L	B	b	H	h	m	V	SW1	SW2	K	LW	H2	d1	d2	h1	Nom. Pressure (bar/PSI)	Weight (kg/lbs)	Order Codes (Standard Option)
04	6	26	8,5	35		8,5	35	17,5	6	57	40	27	43	35	19,5	6	7	19	80	6	67	6	11,8	1,9	250	0,60	MCBVSL-3-04-0081-M
		1.02	.33	1.38		.33	1.38	.69	.24	2.24	1.57	1.06	1.69	1.38	.77	.24	.28	.75	3.15	.24	2.64	.24	.46	.07	3625	1.32	
06	10	29	7,5	55		10	44	19	10	70	55	40	59	45	24,5	11	9	30	115	10	93	9,5	14,9	1,9	500	1,30	MCBVSL-3-06-0081-M
		1.14	.30	2.17		.39	1.73	.75	.39	2.76	2.17	1.57	2.32	1.77	.96	.43	.35	1.18	4.53	.39	3.66	.37	.59	.07	7250	2.86	
08	13	42,5	7,5	83	41,5	16	58	26,5	10	98	60	45	69	55	34	11	9	32	115	13	104	13	24,9	1,9	400	2,20	MCBVSL-3-08-0081-M
		1.67	.30	3.27	1.63	.63	2.28	1.04	.39	3.86	2.36	1.77	2.72	2.17	1.34	.43	.35	1.26	4.53	.51	4.09	.51	.98	.07	5800	4.84	
12	20	51	10	97	48,5	20	69	31,5	10	117	70	51	88	70	37,5	14	14	46	171	20	139	20	29	2	315	3,90	MCBVSL-3-12-0081-M
		2.01	.39	3.82	1.91	.79	2.72	1.24	.39	4.61	2.76	2.01	3.46	2.76	1.48	.55	.55	1.81	6.73	.79	5.47	.79	1.14	.08	4500	8.58	
16	25	62	10	115	57,5	24	81	38	10	135	80	60	98	80	44,5	14	14	50	171	25	149	25	34,9	2,3	315	5,65	MCBVSL-3-16-0081-M
		2.44	.39	4.53	2.26	.94	3.19	1.50	.39	5.31	3.15	2.36	3.86	3.15	1.75	.55	.55	1.97	6.73	.98	5.87	.98	1.37	.09	4500	12.43	
20	32	75	12	136	68	29	96	46	10	165	100	78	121	100	54,5	16,5	17	65	306	32	192	32	40	2	420	11,10	MCBVSL-3-20-0081-M
		2.95	.47	5.35	2.68	1.14	3.78	1.81	.39	6.50	3.94	3.07	4.76	3.94	2.15	.65	.67	2.56	12.05	1.26	7.56	1.26	1.57	.08	6000	24.42	
24	40	84,5	28,5	112	56	28,5	112	56	17	200	130	95	131	110	57	16,5	17	80	306	38	202	38	47,7	2,3	420	19,00	MCBVSL-3-24-0081-M
		3.33	1.12	4.41	2.20	1.12	4.41	2.20	.67	7.87	5.12	3.74	5.16	4.33	2.24	.65	.67	3.15	12.05	1.50	7.95	1.50	1.88	.09	6000	41.80	
32	50	106	38	136	68	38	136	68	15	240	150	112	150	129	71	16,5	17	90	306	48	221	48	59,8	2,3	420	29,30	MCBVSL-3-32-0081-M
		4.17	1.50	5.35	2.68	1.50	5.35	2.68	.59	9.45	5.91	4.41	5.91	5.08	2.80	.65	.67	3.54	12.05	1.89	8.70	1.89	2.35	.09	6000	64.46	

Dimensions and design for stainless steel may vary.

Recommended Bolts, Tightening Torques and O-Rings

STAUFF Size	Nominal Size DN	Recommendations Bolt (min)	Dimensions (mm/in) d3	d4	t	Tightening Torque	O-Ring (Included in Delivery)
04	6	4 x M6 x 40 - 8.8	6,5	10,5	6,8	9 N·m	7x2,5
		4 x 1/4–20 x 1-1/2 UNC - Gr. 5	.26	.41	.27	10 ft·lb	
06	10	4 x M8 x 50 - 8.8	8,4	13,5	8,5	21 N·m	10x2,5
		4 x 5/16–18 x 2-1/2 UNC - Gr. 5	.33	.53	.33	10 ft·lb	
08	13	6 x M8 x 60 - 10.9	8,4	13,5	7	30 N·m	20x2,5
		6 x 5/16–18 x 2-1/2 UNC - Gr. 8	.33	.53	.28	29 ft·lb	
12	20	6 x M10 x 80 - 10.9	10,5	16,5	10,5	60 N·m	23,47x2,62
		6 x 3/8–16 x 3-1/4 UNC - Gr. 10	.41	.65	.41	58 ft·lb	
16	25	6 x M10 x 90 - 12.9	10,5	16,5	10,5	70 N·m	29x3
		6 x 3/8–16 x 3-1/2 UNC - Gr. 10	.41	.65	.41	58 ft·lb	
20	32	6 x M12 x 110 - 10.9	13	19	12	100 N·m	34,59x2,62
		6 x 7/16–14 x 4-1/2 UNC - Gr. 8	.51	.75	.47	70 ft·lb	
24	40	6 x M16 x 120 - 12.9	16,5	25	19	300 N·m	42x3
		6 x 5/8–11 x 5 UNC - Gr. 8	.65	.98	.75	170 ft·lb	
32	50	6 x M20 x 140 - 10.9	21	31	21,5	600 N·m	54x3
		6 x 3/4–10 x 5-1/2 UNC - Gr. 8	.83	1.22	.85	200 ft·lb	

Pressure inlet possible from all ports!
Must be operated without pressure!

Please note: Bolts are not included in delivery.
We recommend to use socket cap screws according to ISO 4762 or ANSI / ASME B18.3 for installation.

Dimensions and design for stainless steel may vary.

B

High-Pressure Block Body Ball Valve ▪ Type CBVL-3

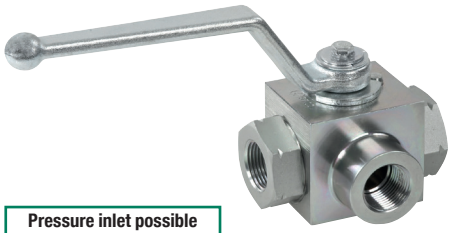

Pressure inlet possible from center port!

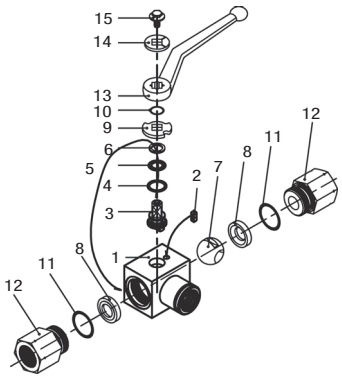

List of Components

No.	Qty.	Description
1	1	Body
2	1	Stop Pin
3*	1	Stem
4*	1	Thrust Ring
5*	1	Stem O-Ring
6*	1	Stem Back Up Ring
7	1	Ball
8*	2	Ball Seat
9	1	Cam Plate
10	1	Snap Ring
11*	2	Connector O-Ring
12	2	Connector
13	1	Handle
14	1	Flow Indicator
15	1	Stem Bolt

Characteristics

Compact three-way high-pressure block body ball valves designed for use as three-way selectors (L-bore, 90° operation) for hydraulic applications

Standard Construction
- Block body design for in-line assembly
- Compact diverter style
- Supplied with off-set lever

Standard Materials
- Body: Carbon Steel, zinc/iron-plated
- Ball: Carbon Steel, hard chrome-plated
- Stem: Carbon Steel
- Lever: Zinc (STAUFF Sizes 02 to 08)
  Carbon Steel (STAUFF Sizes 12 to 32)
- Ball seat: Delrin® (POM)
- O-rings: FKM (Viton®)

Standard Connections Styles / Sizes
- Female BSP thread (DIN ISO 228) >G 2 BSP
- Female NPT thread (ANSI B1.20.1) >2 NPT
- Female UN/UNF thread (SAE J 514) >2-1/2–12 UN (2" SAE)
- 24° Cone Connection (DIN 2353 / ISO 8434-1) >35L
- 24° Cone Connection (DIN 2353 / ISO 8434-1) >38S

Pressure inlet only from the center port!

Pressure Range
- Pressure range: up to 500 bar / 7250 PSI (depending on size and material combination of the ball valve)

Temperature Range
- Operating temperature range:
  -20 °C ... +100 °C / -4 °F ... + 212 °F

Options / Accessories
- Alternative lever designs/materials (see page 114)
- Locking devices (see pages 115-117)
- Actuator packages (see page 118)
- Limit switches (see page 118)
- Additional assembling threads / holes (see page 119)
- Stainless Steel body
- Stainless Steel ball and stem
- Special ball seat and O-ring materials available for lower/higher temperatures and more aggressive media
- Seal kits (including items marked by * in the above list)

Porting Pattern
- Symbol : L
- Overlap: negative
- Operating: 90°

P50

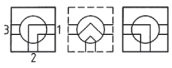

- Stop of end position:

Order Codes

CBVL - 3 - G 02 - 0 0 0 1 - M - -

① ② ③ ④ ⑤ ⑥ ⑦ ⑧ ⑨ ⑩ ⑪

① Type

Compact High-Pressure Block Body Ball Valve	**CBVL**

② Number of Ports

Three Ports (Three-Way Ball Valve)	**3**

③ Connection Style

Female BSP Thread (DIN ISO 228)	**G**
Female NPT Thread (ANSI B1.20.1)	**N**
Female UN/UNF Thread (SAE J 514)	**U**
24° Cone Connection (Light / Heavy Series)	**—**

Please contact STAUFF for alternative connection styles.

④ Connection Size

STAUFF Size (according to dimension table) for connection styles G, N and U:

02	**04**	**06**	**08**	**12**	**16**	**20**	**24**	**32**

Tube Size (according to dimension table) for 24° Cone Connection (Light Series):

06L	**08L**	**10L**	**12L**	**15L**	**18L**	**22L**	**28L**	**35L**

Tube Size (according to dimension table) for 24° Cone Connection (Heavy Series):

08S	**10S**	**12S**	**14S**	**16S**	**20S**	**25S**	**30S**	**38S**

Please contact STAUFF for alternative connection sizes.

⑤ Body Material / Surface Finishing

Carbon Steel, zinc/iron-plated	**0**
Carbon Steel, zinc/nickel-plated	**8**
Stainless Steel V4A (AISI 316Ti)	**1**

Note: Stainless steel version may vary in dimensions and design.
Alternative materials / surface finishings are available upon request. Contact STAUFF for further information.

⑥ Ball / Stem Material

Ball: Carbon Steel, hard chrome-plated Stem: Carbon Steel	**0**
Ball / Stem: Stainless Steel V4A (AISI 316Ti)	**1**

Alternative materials / surface finishings are available upon request. Contact STAUFF for further information.

⑦ Ball Seat Material

Delrin® (POM)	**0**

Alternative materials are available upon request. Contact STAUFF for further information.

⑧ O-Ring Material

NBR (Buna-N®)	**0**
FKM (Viton®)	**1**
EPDM	**3**

Alternative materials are available upon request. Contact STAUFF for further information.

⑨ Manufacturing Code

Manufacturing code for all connection styles	**M**

⑩ Lever Options

Supplied with standard lever (according to table)	**—**
Supplied without lever	**0**

Alternative levers can be ordered separately. Please see page 114 for further information.

⑪ Accessories / Options

Supplied without accessories	**—**
Supplied with Locking Device LD1	**LD1**
Supplied with Locking Device LD2	**LD2**
Supplied with Locking Device LD3	**LD3**
Supplied with Locking Device LD4	**LD4**

Please see page 115-119 for further information and options.

zinc/nickel-plated

High-Pressure Block Body Ball Valve ▪ Type CBVL-3
L-Bore Three-Way Selector ▪ Female BSP Thread (DIN ISO 228)

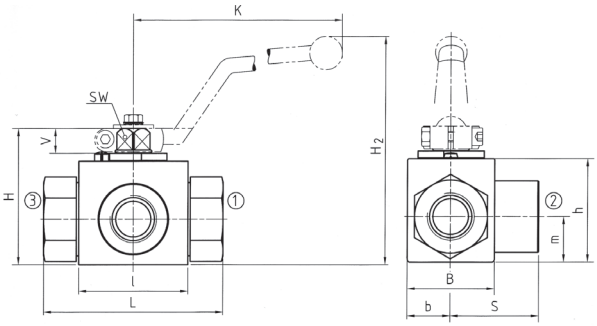

Female BSP Thread (DIN ISO 228)

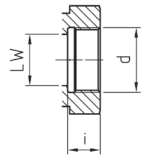

When ordering the standard option as indicated in the table below, the following materials will be supplied:

- Body, ball and stem: Carbon Steel
- Lever: Zinc (STAUFF Sizes 02 to 08)
  Carbon Steel (STAUFF Sizes 12 to 32)
- Ball seat: Delrin® (POM)
- O-rings: FKM (Viton®)

From DN32, STAUFF size 20 made from one block

Pressure Inlet only from the Center Port

STAUFF Size	Thread Size d	Nominal Size DN	Dimensions (mm/in) LW	L	l	b	B	H	h	m	S	V	SW	K	i	H2	Nom. Pressure (bar/PSI)	Weight (kg/lbs)	Order Codes (Standard Option)
02	G 1/8 BSP	4	5	69	40	13	29	47	33	13,5	34,5	11	9	115	10	82	500	0,40	CBVL-3-G02-8001-M *
			.20	2.72	1.57	.51	1.14	1.85	1.30	.53	1.36	.43	.35	4.53	.39	3.23	7250	.88	
04	G 1/4 BSP	6	6	69	40	13	29	47	33	13,5	34,5	11	9	115	14	82	500	0,46	CBVL-3-G04-8001-M *
			.24	2.72	1.57	.51	1.14	1.85	1.30	.53	1.36	.43	.35	4.53	.55	3.23	7250	1.01	
06	G 3/8 BSP	10	10	72	43	16	35	52	38	17,5	36	11	9	115	14	87	500	0,60	CBVL-3-G06-8001-M *
			.39	2.83	1.69	.63	1.38	2.05	1.50	.69	1.42	.43	.35	4.53	.55	3.42	7250	1.32	
08	G 1/2 BSP	13	13	83	48	17,5	38	54	40	19	41,5	11	9	115	16,3	89	500	0,70	CBVL-3-G08-8001-M *
			.51	3.27	1.89	.69	1.50	2.13	1.57	.75	1.63	.43	.35	4.53	.64	3.50	7250	1.54	
12	G 3/4BSP	20	20	95	62	24,5	52	75	57	24,5	47,5	14	14	170	18	126	315	1,80	CBVL-3-G12-8001-M *
			.79	3.74	2.44	.96	2.05	2.95	2.24	.96	1.87	.55	.55	6.69	.71	4.96	4500	3.96	
16	G 1 BSP	25	25	113	66	29	61	83	65	29,5	56,5	14	14	170	20	134	315	2,40	CBVL-3-G16-8001-M *
			.98	4.45	2.60	1.14	2.40	3.27	2.56	1.16	2.22	.55	.55	6.69	.79	5.73	4500	5.28	
20	G 1-1/4 BSP	32	30	111	81	39		106	84,5	39	55	16,5	17	320	22	170	350	3,80	CBVL-3-G20-0001-M
			1.18	4.37	3.19	1.54		4.17	3.33	1.54	2.17	.65	.67	12.60	.87	6.69	5000	8.36	
24	G 1-1/2 BSP	40	38	130	104	53		127	106	53	65	16,5	17	320	24	191	350	6,20	CBVL-3-G24-0001-M
			1.50	5.12	4.09	2.09		5.00	4.17	2.09	2.56	.65	.67	12.60	.94	7.52	5000	13.64	
32	G 2 BSP	50	48	150	118	58	116	137	116	58	75	16,5	17	320	26	201	350	7,80	CBVL-3-G32-0001-M
			1.89	5.91	4.65	2.28	4.57	5.39	4.57	2.28	2.95	.65	.67	12.60	1.02	7.91	5000	17.16	

Please note the pressure ratings of the tube connections.
Dimensions and design for stainless steel may vary.

* Standard option zinc/nickel

High-Pressure Block Body Ball Valve ▪ Type CBVL-3
L-Bore Three-Way Selector ▪ Female NPT Thread (ANSI B1.20.1)

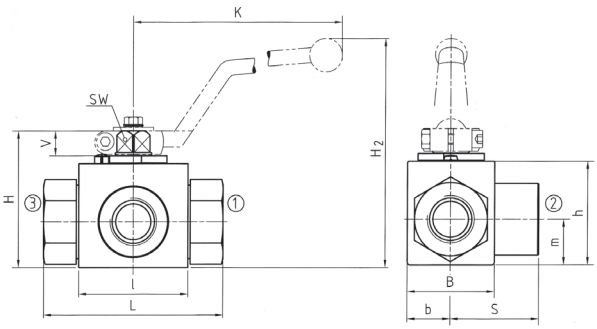

Female NPT Thread (ANSI B1.20.1)

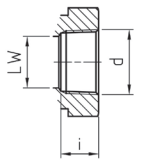

When ordering the standard option as indicated in the table below, the following materials will be supplied:

- Body, ball and stem: Carbon Steel
- Lever: Zinc (STAUFF Sizes 02 to 08)
  Carbon Steel (STAUFF Sizes 12 to 32)
- Ball seat: Delrin® (POM)
- O-rings: FKM (Viton®)

From DN32, STAUFF size 20 made from one block

Pressure Inlet only from the Center Port

STAUFF Size	Thread Size d	Nominal Size DN	Dimensions (mm/in) LW	L	l	b	B	H	h	K	S	V	SW	K	i	H2	Nom. Pressure (bar/PSI)	Weight (kg/lbs)	Order Codes (Standard Option)
02	1/8 NPT	4	5	69	40	13	29	47	33	13,5	34,5	11	9	115	10,5	82	500	0,40	CBVL-3-N02-0001-M
			.20	2.72	1.57	.51	1.14	1.85	1.30	.53	1.36	.43	.35	4.53	.41	3.23	7250	.88	
04	1/4 NPT	6	6	69	40	13	29	47	33	13,5	34,5	11	9	115	13,7	82	500	0,46	CBVL-3-N04-0001-M
			.24	2.72	1.57	.51	1.14	1.85	1.30	.53	1.36	.43	.35	4.53	.54	3.23	7250	1.01	
06	3/8 NPT	10	10	72	43	16	35	52	38	17,5	36	11	9	115	13,5	87	500	0,60	CBVL-3-N06-0001-M
			.39	2.83	1.69	.63	1.38	2.05	1.50	.69	1.42	.43	.35	4.53	.53	3.42	7250	1.32	
08	1/2 NPT	13	13	83	48	17,5	38	54	40	19	41,5	11	9	115	17	89	500	0,70	CBVL-3-N08-0001-M
			.51	3.27	1.89	.69	1.50	2.13	1.57	.75	1.63	.43	.35	4.53	.67	3.50	7250	1.54	
12	3/4NPT	20	20	95	62	24,5	52	75	57	24,5	47,5	14	14	170	18,3	126	315	1,80	CBVL-3-N12-0001-M
			.79	3.74	2.44	.96	2.05	2.95	2.24	.96	1.87	.55	.55	6.69	.72	4.96	4500	3.96	
16	1 NPT	25	25	113	66	29	61	83	65	29,5	56,5	14	14	170	21,6	134	315	2,40	CBVL-3-N16-0001-M
			.98	4.45	2.60	1.14	2.40	3.27	2.56	1.16	2.22	.55	.55	6.69	.85	5.73	4500	5.28	
20	1-1/4 NPT	32	30	120	81	39		106	84,5	39	55	16,5	17	320	22,1	170	350	3,80	CBVL-3-N20-0001-M
			1.18	4.72	3.19	1.54		4.17	3.33	1.54	2.17	.65	.67	12.60	.87	6.69	5000	8.36	
24	1-1/2 NPT	40	38	140	104	53		127	106	53	65	16,5	17	320	22,1	191	350	6,20	CBVL-3-N24-0001-M
			1.50	5.51	4.09	2.09		5.00	4.17	2.09	2.56	.65	.67	12.60	.87	7.52	5000	13.64	
32	2 NPT	50	48	150	118	58	116	137	116	58	75	16,5	17	320	30,2	201	350	7,80	CBVL-3-N32-0001-M
			1.89	5.91	4.65	2.28	4.57	5.39	4.57	2.28	2.95	.65	.67	12.60	1.19	7.91	5000	17.16	

Please note the pressure ratings of the tube connections.
Dimensions and design for stainless steel may vary.

B

High-Pressure Block Body Ball Valve ▪ Type CBVL-3
L-Bore Three-Way Selector ▪ Female UN/UNF Thread (SAE J 514)

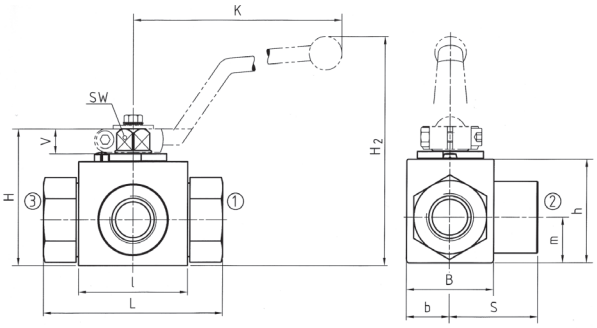

When ordering the standard option as indicated in the table below, the following materials will be supplied:

- Body, ball and stem: Carbon Steel
- Lever: Zinc (STAUFF Sizes 04 to 08)
  Carbon Steel (STAUFF Sizes 12 to 32)
- Ball seat: Delrin® (POM)
- O-rings: FKM (Viton®)

From DN32, STAUFF size 20 made from one block

Female UN/UNF Thread (SAE J 514)

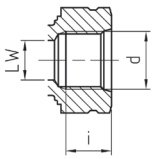

Pressure Inlet only from the Center Port

STAUFF Size	Thread Size d	Nominal Size DN	Dimensions (mm/in) LW	L	l	b	B	H	h	K	S	V	SW	K	i	H2	Nom. Pressure (bar/PSI)	Weight (kg/lbs)	Order Codes (Standard Option)
04	7/16–20 UNF	6	5	69	40	13	29	47	33	13,5	34,5	11	9	115	12	82	500	0,46	CBVL-3-U04-0001-M
	(1/4" SAE)		.20	2.72	1.57	.51	1.14	1.85	1.30	.53	1.36	.43	.35	4.53	.47	3.23	7250	1.01	
06	9/16–18 UNF	10	10	72	43	16	35	52	38	17,5	36	11	9	115	13	87	500	0,60	CBVL-3-U06-0001-M
	(3/4" SAE)		.39	2.83	1.69	.63	1.38	2.05	1.50	.69	1.42	.43	.35	4.53	.51	3.42	7250	1.32	
08	3/4–16 UNF	13	13	83	48	17,5	38	54	40	19	41,5	11	9	115	15	89	500	0,70	CBVL-3-U08-0001-M
	(1/2" SAE)		.51	3.27	1.89	.69	1.50	2.13	1.57	.75	1.63	.43	.35	4.53	.59	3.50	7250	1.54	
12	1-1/16–12 UN	20	20	95	62	24,5	52	75	57	24,5	47,5	14	14	170	20	126	315	1,80	CBVL-3-U12-0001-M
	(3/4" SAE)		.79	3.74	2.44	.96	2.05	2.95	2.24	.96	1.87	.55	.55	6.69	.79	4.96	4500	3.96	
16	1-5/16–12 UN	25	25	113	66	29	61	83	65	29,5	56,5	14	14	170	20	134	315	2,40	CBVL-3-U16-0001-M
	(1" SAE)		.98	4.45	2.60	1.14	2.40	3.27	2.56	1.16	2.22	.55	.55	6.69	.79	5.73	4500	5.28	
20	1-5/8–12 UN	32	30	111	81	39		106	84,5	39	55	16,5	17	320	20	170	350	3,80	CBVL-3-U20-0001-M
	(1-1/4" SAE)		1.18	4.37	3.19	1.54		4.17	3.33	1.54	2.17	.65	.67	12.60	.79	6.69	5000	8.36	
24	1-7/8–12 UN	40	38	130	104	53		127	106	53	65	16,5	17	320	20	191	350	6,20	CBVL-3-U24-0001-M
	(1-1/2" SAE)		1.50	5.12	4.09	2.09		5.00	4.17	2.09	2.56	.65	.67	12.60	.79	7.52	5000	13.64	
32	2-1/2–12 UN	50	48	150	118	58	116	137	116	58	75	16,5	17	320	20	201	350	7,80	CBVL-3-U32-0001-M
	(2" SAE)		1.89	5.91	4.65	2.28	4.57	5.39	4.57	2.28	2.95	.65	.67	12.60	.79	7.91	5000	17.16	

Please note the pressure ratings of the tube connections.
Dimensions and design for stainless steel may vary.

B

zinc/nickel-plated

High-Pressure Block Body Ball Valve ▪ Type CBVL-3
L-Bore Three-Way Selector ▪ 24° Cone Connection
Light Series (DIN 2353 / ISO 8434-1)

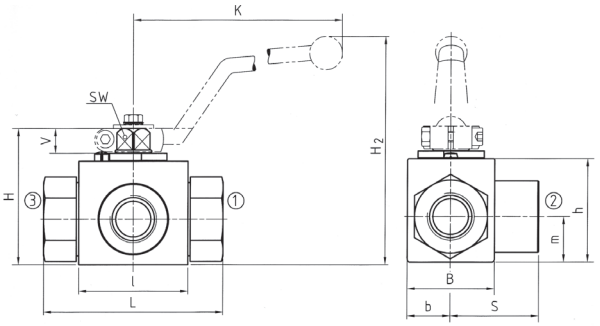

Pressure Inlet only from the Center Port

Union nuts and cutting rings are not included in delivery.

24° Cone Connection (DIN 2353 / ISO 8434-1)

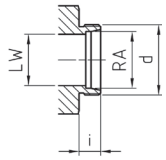

When ordering the standard option as indicated in the table below, the following materials will be supplied:

- Body, ball and stem: Carbon Steel
- Lever: Zinc (STAUFF Sizes 02 to 08)
  Carbon Steel (STAUFF Sizes 12 to 20R)
- Ball seat: Delrin® (POM)
- O-rings: FKM (Viton®)

STAUFF Size	Tube/Thread Size d	Nominal Size DN	Dimensions (mm/in) RA	LW	L	l	b	B	H	h	m	S	V	SW	K	i	H2	Nom. Pressure (bar/PSI)	Weight (kg/lbs)	Order Codes (Standard Option)
02	06L / M12 x 1,5	4	6	5	67	40	13	29	47	33	13,5	33,5	11	9	115	10	82	500	0,30	CBVL-3-06L-8001-M
			.24	.20	2.64	1.57	.51	1.14	1.85	1.30	.53	1.32	.43	.35	4.53	.39	3.23	7250	.66	
04	08L / M14 x 1,5	6	8	6	67	40	13	29	47	33	13,5	33,5	11	9	115	10	82	500	0,40	CBVL-3-08L-8001-M
			.31	.24	2.64	1.57	.51	1.14	1.85	1.30	.53	1.32	.43	.35	4.53	.39	3.23	7250	.88	
05	10L / M16 x 1,5	8	10	6	74	40	13	29	47	33	13,5	34,5	11	9	115	11	82	500	0,40	CBVL-3-10L-8001-M
			.39	.24	2.91	1.57	.51	1.14	1.85	1.30	.53	1.36	.43	.35	4.53	.43	3.23	7250	.88	
06	12L / M18 x 1,5	10	12	10	74	43	16	35	52	38	17,5	36,5	11	9	115	11	87	500	0,50	CBVL-3-12L-8001-M
			.47	.39	2.91	1.69	.63	1.38	2.05	1.50	.69	1.44	.43	.35	4.53	.43	3.42	7250	1.10	
08	15L / M22 x 1,5	13	15	13	82	48	17,5	38	54	40	19	41,5	11	9	115	12	89	500	0,65	CBVL-3-15L-8001-M
			.59	.51	3.23	1.89	.69	1.50	2.13	1.57	.75	1.63	.43	.35	4.53	.47	3.50	7250	1.43	
08	18L / M26 x 1,5	13	18	13	82	48	17,5	38	54	40	19	41,5	11	9	115	12	89	500	0,69	CBVL-3-18LDN13-8001-M
			.71	.51	2.23	1.89	.69	1.50	2.13	1.57	.75	1.63	.43	.35	4.53	.47	3.50	7250	1.52	
12	22L / M30 x 2	20	22	20	101	62	24,5	52	75	57	24,5	48	14	14	170	14	126	315	1,50	CBVL-3-22L-8001-M
			.87	.79	3.98	2.44	.96	2.05	2.95	2.24	.96	1.89	.55	.55	6.69	.55	4.96	4500	3.30	
16	28L / M36 x 2	25	28	25	108	66	29	61	83	65	29,5	54	14	14	170	14	134	315	2,10	CBVL-3-28L-8001-M
			1.10	.98	4.25	2.60	1.14	2.40	3.27	2.56	1.16	2.13	.55	.55	6.69	.55	5.73	4500	4.62	
20R	35L / M45 x 2	25/32	35	25	112	66	29	61	83	65	29,5	56	14	14	170	16	134	315	2,50	CBVL-3-35LDN25-8001-M
			1.38	.98	4.41	2.60	1.14	2.40	3.27	2.56	1.16	2.20	.55	.55	6.69	.63	5.73	4500	5.50	

Please note the pressure ratings of the tube connections. Dimensions and design for stainless steel may vary.

zinc/nickel-plated

High-Pressure Block Body Ball Valve ▪ Type CBVL-3
L-Bore Three-Way Selector ▪ 24° Cone Connection
Heavy Series (DIN 2353 / ISO 8434-1)

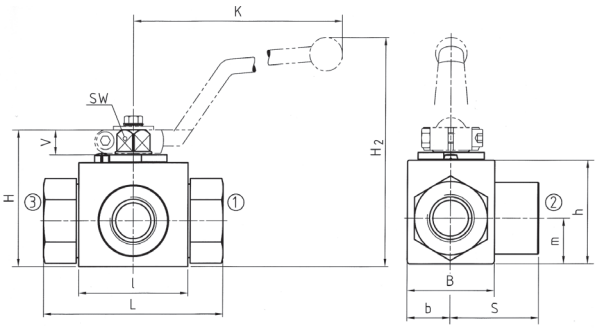

Pressure Inlet only from the Center Port

Union nuts and cutting rings are not included in delivery.

24° Cone Connection (DIN 2353 / ISO 8434-1)

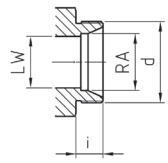

When ordering the standard option as indicated in the table below, the following materials will be supplied:

- Body, ball and stem: Carbon Steel
- Lever: Zinc (STAUFF Sizes 02 to 08)
  Carbon Steel (STAUFF Sizes 12 to 20R)
- Ball seat: Delrin® (POM)
- O-rings: FKM (Viton®)

STAUFF Size	Tube/Thread Size d	Nominal Size DN	Dimensions (mm/in) RA	LW	L	l	b	B	H	h	m	S	V	SW	K	i	H2	Nom. Pressure (bar/PSI)	Weight (kg/lbs)	Order Codes (Standard Option)
02	08S / M16 x 1,5	4	8	5	73	40	13	29	47	33	13,5	34,5	11	9	115	12	82	500	0,42	CBVL-3-08S-8001-M
			.31	.20	2.87	1.57	.51	1.14	1.85	1.30	.53	1.36	.43	.35	4.53	.47	3.23	7250	.92	
04	10S / M18 x 1,5	6	10	6	73	40	13	29	47	33	13,5	34,5	11	9	115	12	82	500	0,43	CBVL-3-10S-8001-M
			.39	.24	2.87	1.57	.51	1.14	1.85	1.30	.53	1.36	.43	.35	4.53	.47	3.23	7250	.95	
05	12S / M20 x 1,5	8	12	6	76	40	13	29	47	33	13,5	34,5	11	9	115	12	82	500	0,44	CBVL-3-12S-8001-M
			.47	.24	2.99	1.57	.51	1.14	1.85	1.30	.53	1.36	.43	.35	4.53	.47	3.23	7250	.97	
06	14S / M22 x 1,5	10	14	10	80	43	16	35	52	38	17,5	36,5	11	9	115	14	87	500	0,50	CBVL-3-14S-8001-M
			.55	.39	3.15	1.69	.63	1.38	2.05	1.50	.69	1.43	.43	.35	4.53	.55	3.42	7250	1.10	
08	16S / M24 x 1,5	13	16	13	86	48	17,5	38	54	40	19	43	11	9	115	14	89	500	0,65	CBVL-3-16S-8001-M
			.63	.51	3.39	1.89	.69	1.50	2.13	1.57	.75	1.69	.43	.35	4.53	.55	3.50	7250	1.43	
08	20S / M30 x 2	13	20	13	90	48	17,5	38	54	40	19	43	11	9	115	16	89	500	0,70	CBVL-3-20SDN13-8001-M
			.79	.51	3.54	1.89	.69	1.50	2.13	1.57	.75	1.69	.43	.35	4.53	.63	3.50	7250	1.54	
12	25S / M36 x 2	20	25	20	109	62	24,5	52	75	57	24,5	48	14	14	170	18	126	315	1,70	CBVL-3-25S-8001-M
			.98	.79	4.29	2.44	.96	2.05	2.95	2.24	.96	1.89	.55	.55	6.69	.71	4.96	4500	3.74	
16	30S / M42 x 2	25	30	25	120	66	29	61	83	65	29,5	57,5	14	14	170	20	134	315	2,40	CBVL-3-30S-8001-M
			1.18	.98	4.72	2.60	1.14	2.40	3.27	2.56	1.16	2.26	.55	.55	6.69	.79	5.73	4500	5.28	
20R	38S / M52 x 2	25/32	38	25	124	66	29	61	83	65	29,5	57,5	14	14	170	22	134	315	2,80	CBVL-3-38SDN25-8001-M
			1.50	.98	4.88	2.60	1.14	2.40	3.27	2.56	1.16	2.26	.55	.55	6.69	.87	5.73	4500	6.16	

Please note the pressure ratings of the tube connections. Dimensions and design for stainless steel may vary.

B

High-Pressure Block Body Ball Valve ▪ Type CBVT-3

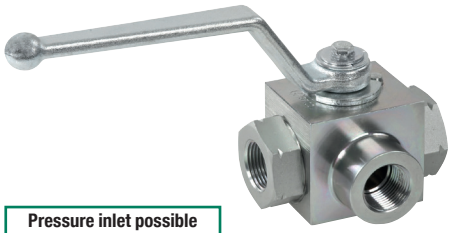

Pressure inlet possible from center port!

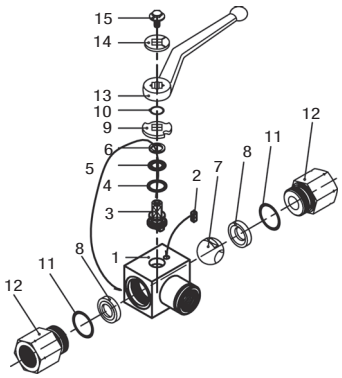

List of Components

No.	Qty.	Description
1	1	Body
2	1	Stop Pin
3*	1	Stem
4*	1	Thrust Ring
5*	1	Stem O-Ring
6*	1	Stem Back Up Ring
7	1	Ball
8*	2	Ball Seat
9	1	Cam Plate
10	1	Snap Ring
11*	2	Connector O-Ring
12	2	Connector
13	1	Handle
14	1	Flow Indicator
15	1	Stem Bolt

Characteristics

Compact three-way high-pressure block body ball valves designed for use as three-way selectors (T-bore, 90° operation) for hydraulic applications

Standard Construction
- Block body design for in-line assembly
- Compact diverter style
- Supplied with off-set lever

Standard Materials
- Body: Carbon Steel, zinc/iron-plated
- Ball: Carbon Steel, hard chrome-plated
- Stem: Carbon Steel
- Lever: Zinc (STAUFF Sizes 02 to 08)
  Carbon Steel (STAUFF Sizes 12 to 32)
- Ball seat: Delrin® (POM)
- O-rings: FKM (Viton®)

Standard Connections Styles / Sizes
- Female BSP thread (DIN ISO 228) >G 2 BSP
- Female NPT thread (ANSI B1.20.1) >2 NPT
- Female UN/UNF thread (SAE J 514) >2-1/2–12 UN (2" SAE)
- 24° Cone Connection (DIN 2353 / ISO 8434-1) >35L
- 24° Cone Connection (DIN 2353 / ISO 8434-1) >38S

Pressure inlet only from the center port!

Pressure Range
- Pressure range: up to 500 bar / 7250 PSI (depending on size and material combination of the ball valve)

Temperature Range
- Operating temperature range:
  -20 °C ... +100 °C / -4 °F ... + 212 °F

Options / Accessories
- Alternative lever designs/materials (see page 114)
- Locking devices (see pages 115-117)
- Actuator packages (see page 118)
- Limit switches (see page 118)
- Additional assembling threads / holes (see page 119)
- Stainless Steel body
- Stainless Steel ball and stem
- Special ball seat and O-ring materials available for lower/higher temperatures and more aggressive media
- Seal kits (including items marked by * in the above list)

Porting Pattern
- Symbol : T
- Overlap: negative
- Operating: 90°

P51

- Stop of end position:

Order Codes

CBVT - 3 - G 02 - 0 0 0 1 - M - -

① ② ③ ④ ⑤ ⑥ ⑦ ⑧ ⑨ ⑩ ⑪

① Type

Compact High-Pressure Block Body Ball Valve	**CBVT**

② Number of Ports

Three Ports (Three-Way Ball Valve)	**3**

③ Connection Style

Female BSP Thread (DIN ISO 228)	**G**
Female NPT Thread (ANSI B1.20.1)	**N**
Female UN/UNF Thread (SAE J 514)	**U**
24° Cone Connection (Light / Heavy Series)	**—**

Please contact STAUFF for alternative connection styles.

④ Connection Size

STAUFF Size (according to dimension table) for connection styles G, N and U:

02	**04**	**06**	**08**	**12**	**16**	**20**	**24**	**32**

Tube Size (according to dimension table) for 24° Cone Connection (Light Series):

06L	**08L**	**10L**	**12L**	**15L**	**18L**	**22L**	**28L**	**35L**

Tube Size (according to dimension table) for 24° Cone Connection (Heavy Series):

08S	**10S**	**12S**	**14S**	**16S**	**20S**	**25S**	**30S**	**38S**

Please contact STAUFF for alternative connection sizes.

⑤ Body Material / Surface Finishing

Carbon Steel, zinc/iron-plated	**0**
Carbon Steel, zinc/nickel-plated	**8**
Stainless Steel V4A (AISI 316Ti)	**1**

Note: Stainless steel version may vary in dimensions and design.
Alternative materials / surface finishings are available upon request. Contact STAUFF for further information.

⑥ Ball / Stem Material

Ball: Carbon Steel, hard chrome-plated Stem: Carbon Steel	**0**
Ball / Stem: Stainless Steel V4A (AISI 316Ti)	**1**

Alternative materials / surface finishings are available upon request. Contact STAUFF for further information.

⑦ Ball Seat Material

Delrin® (POM)	**0**

Alternative materials are available upon request. Contact STAUFF for further information.

⑧ O-Ring Material

NBR (Buna-N®)	**0**
FKM (Viton®)	**1**
EPDM	**3**

Alternative materials are available upon request. Contact STAUFF for further information.

⑨ Manufacturing Code

Manufacturing code for all connection styles	**M**

⑩ Lever Options

Supplied with standard lever (according to table)	**—**
Supplied without lever	**0**

Alternative levers can be ordered separately. Please see page 114 for further information.

⑪ Accessories / Options

Supplied without accessories	**—**
Supplied with Locking Device LD1	**LD1**
Supplied with Locking Device LD2	**LD2**
Supplied with Locking Device LD3	**LD3**
Supplied with Locking Device LD4	**LD4**

Please see page 115-119 for further information and options.

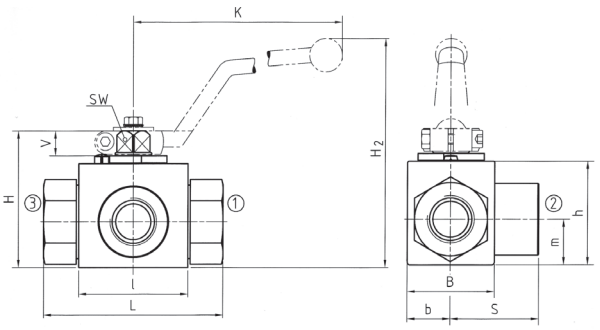

High-Pressure Block Body Ball Valve ▪ Type CBVT-3
T-Bore Three-Way Selector ▪ Female BSP Thread (DIN ISO 228)

Female BSP Thread (DIN ISO 228)

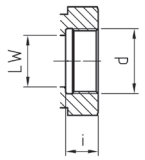

When ordering the standard option as indicated in the table below, the following materials will be supplied:

- Body, ball and stem: Carbon Steel
- Lever: Zinc (STAUFF Sizes 02 to 08)
  Carbon Steel (STAUFF Sizes 12 to 32)
- Ball seat: Delrin® (POM)
- O-rings: FKM (Viton®)

From DN32, STAUFF size 20 made from one block

Pressure Inlet only from the Center Port

STAUFF Size	Thread Size d	Nominal Size DN	Dimensions (mm/in) LW	L	l	b	B	H	h	m	S	V	SW	K	i	H2	Nom. Pressure (bar/PSI)	Weight (kg/lbs)	Order Codes (Standard Option)
02	G 1/8 BSP	4	5	69	40	13	29	47	33	13,5	34,5	11	9	115	10	82	500	0,40	CBVT-3-G02-0001-M
			.20	2.72	1.57	.51	1.14	1.85	1.30	.53	1.36	.43	.35	4.53	.39	3.23	7250	.88	
04	G 1/4 BSP	6	6	69	40	13	29	47	33	13,5	34,5	11	9	115	14	82	500	0,46	CBVT-3-G04-0001-M
			.24	2.72	1.57	.51	1.14	1.85	1.30	.53	1.36	.43	.35	4.53	.55	3.23	7250	1.01	
06	G 3/8 BSP	10	10	72	43	16	35	52	38	17,5	36	11	9	115	14	87	500	0,60	CBVT-3-G06-0001-M
			.39	2.83	1.69	.63	1.38	2.05	1.50	.69	1.42	.43	.35	4.53	.55	3.42	7250	1.32	
08	G 1/2 BSP	13	13	83	48	17,5	38	54	40	19	41,5	11	9	115	16,3	89	500	0,70	CBVT-3-G08-0001-M
			.51	3.27	1.89	.69	1.50	2.13	1.57	.75	1.63	.43	.35	4.53	.64	3.50	7250	1.54	
12	G 3/4BSP	20	20	95	62	24,5	52	75	57	24,5	47,5	14	14	170	18	126	315	1,80	CBVT-3-G12-0001-M
			.79	3.74	2.44	.96	2.05	2.95	2.24	.96	1.87	.55	.55	6.69	.71	4.96	4500	3.96	
16	G 1 BSP	25	25	113	66	29	61	83	65	29,5	56,5	14	14	170	20	134	315	2,40	CBVT-3-G16-0001-M
			.98	4.45	2.60	1.14	2.40	3.27	2.56	1.16	2.22	.55	.55	6.69	.79	5.73	4500	5.28	
20	G 1-1/4 BSP	32	30	111	81	39		106	84,5	39	55	16,5	17	320	22	170	350	3,80	CBVT-3-G20-0001-M
			1.18	4.37	3.19	1.54		4.17	3.33	1.54	2.17	.65	.67	12.60	.87	6.69	5000	8.36	
24	G 1-1/2 BSP	40	38	130	104	53		127	106	53	65	16,5	17	320	24	191	350	6,20	CBVT-3-G24-0001-M
			1.50	5.12	4.09	2.09		5.00	4.17	2.09	2.56	.65	.67	12.60	.94	7.52	5000	13.64	
32	G 2 BSP	50	48	150	118	58	116	137	116	58	75	16,5	17	320	26	201	350	7,80	CBVT-3-G32-0001-M
			1.89	5.91	4.65	2.28	4.57	5.39	4.57	2.28	2.95	.65	.67	12.60	1.02	7.91	5000	17.16	

Please note the pressure ratings of the tube connections.
Dimensions and design for stainless steel may vary.

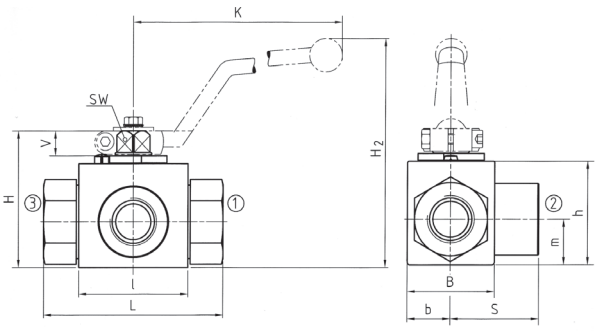

High-Pressure Block Body Ball Valve ▪ Type CBVT-3
T-Bore Three-Way Selector ▪ Female NPT Thread (ANSI B1.20.1)

Female NPT Thread (ANSI B1.20.1)

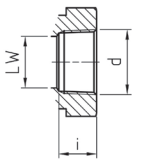

When ordering the standard option as indicated in the table below, the following materials will be supplied:

- Body, ball and stem: Carbon Steel
- Lever: Zinc (STAUFF Sizes 02 to 08)
  Carbon Steel (STAUFF Sizes 12 to 32)
- Ball seat: Delrin® (POM)
- O-rings: FKM (Viton®)

From DN32, STAUFF size 20 made from one block

Pressure Inlet only from the Center Port

STAUFF Size	Thread Size d	Nominal Size DN	Dimensions (mm/in) LW	L	l	b	B	H	h	K	S	V	SW	K	i	H2	Nom. Pressure (bar/PSI)	Weight (kg/lbs)	Order Codes (Standard Option)
02	1/8 NPT	4	5	69	40	13	29	47	33	13,5	34,5	11	9	115	10,5	82	500	0,40	CBVT-3-N02-0001-M
			.20	2.72	1.57	.51	1.14	1.85	1.30	.53	1.36	.43	.35	4.53	.41	3.23	7250	.88	
04	1/4 NPT	6	6	69	40	13	29	47	33	13,5	34,5	11	9	115	13,7	82	500	0,46	CBVT-3-N04-0001-M
			.24	2.72	1.57	.51	1.14	1.85	1.30	.53	1.36	.43	.35	4.53	.54	3.23	7250	1.01	
06	3/8 NPT	10	10	72	43	16	35	52	38	17,5	36	11	9	115	13,5	87	500	0,60	CBVT-3-N06-0001-M
			.39	2.83	1.69	.63	1.38	2.05	1.50	.69	1.42	.43	.35	4.53	.53	3.42	7250	1.32	
08	1/2 NPT	13	13	83	48	17,5	38	54	40	19	41,5	11	9	115	17	89	500	0,70	CBVT-3-N08-0001-M
			.51	3.27	1.89	.69	1.50	2.13	1.57	.75	1.63	.43	.35	4.53	.67	3.50	7250	1.54	
12	3/4NPT	20	20	95	62	24,5	52	75	57	24,5	47,5	14	14	170	18,3	126	315	1,80	CBVT-3-N12-0001-M
			.79	3.74	2.44	.96	2.05	2.95	2.24	.96	1.87	.55	.55	6.69	.72	4.96	4500	3.96	
16	1 NPT	25	25	113	66	29	61	83	65	29,5	56,5	14	14	170	21,6	134	315	2,40	CBVT-3-N16-0001-M
			.98	4.45	2.60	1.14	2.40	3.27	2.56	1.16	2.22	.55	.55	6.69	.85	5.73	4500	5.28	
20	1-1/4 NPT	32	30	120	81	39		106	84,5	39	55	16,5	17	320	22,1	170	350	3,80	CBVT-3-N20-0001-M
			1.18	4.72	3.19	1.54		4.17	3.33	1.54	2.17	.65	.67	12.60	.87	6.69	5000	8.36	
24	1-1/2 NPT	40	38	140	104	53		127	106	53	65	16,5	17	320	22,1	191	350	6,20	CBVT-3-N24-0001-M
			1.50	5.51	4.09	2.09		5.00	4.17	2.09	2.56	.65	.67	12.60	.87	7.52	5000	13.64	
32	2 NPT	50	48	150	118	58	116	137	116	58	75	16,5	17	320	30,2	201	350	7,80	CBVT-3-N32-0001-M
			1.89	5.91	4.65	2.28	4.57	5.39	4.57	2.28	2.95	.65	.67	12.60	1.19	7.91	5000	17.16	

Please note the pressure ratings of the tube connections.
Dimensions and design for stainless steel may vary.

B

High-Pressure Block Body Ball Valve ▪ Type CBVT-3
T-Bore Three-Way Selector ▪ Female UN/UNF Thread (SAE J 514)

When ordering the standard option as indicated in the table below, the following materials will be supplied:

- Body, ball and stem: Carbon Steel
- Lever: Zinc (STAUFF Sizes 04 to 08)
  Carbon Steel (STAUFF Sizes 12 to 32)
- Ball seat: Delrin® (POM)

O-rings: FKM (Viton®)

From DN32, STAUFF size 20 made from one block

Female UN/UNF Thread (SAE J 514)

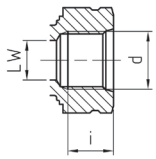

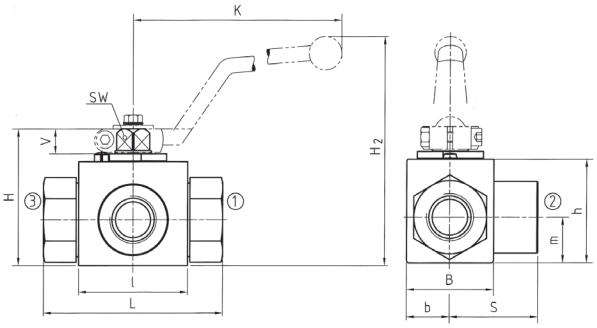

Pressure Inlet only from the Center Port

STAUFF Size	Thread Size d	Nominal Size DN	Dimensions (mm/in) LW	L	l	b	B	H	h	K	S	V	SW	K	i	H2	Nom. Pressure (bar/PSI)	Weight (kg/lbs)	Order Codes (Standard Option)
04	7/16–20 UNF	6	5	69	40	13	29	47	33	13,5	34,5	11	9	115	12	82	500	0,46	CBVT-3-U04-0001-M
	(1/4" SAE)		.20	2.72	1.57	.51	1.14	1.85	1.30	.53	1.36	.43	.35	4.53	.47	3.23	7250	1.01	
06	9/16–18 UNF	10	10	72	43	16	35	52	38	17,5	36	11	9	115	13	87	500	0,60	CBVT-3-U06-0001-M
	(3/4" SAE)		.39	2.83	1.69	.63	1.38	2.05	1.50	.69	1.42	.43	.35	4.53	.51	3.42	7250	1.32	
08	3/4–16 UNF	13	13	83	48	17,5	38	54	40	19	41,5	11	9	115	15	89	500	0,70	CBVT-3-U08-0001-M
	(1/2" SAE)		.51	3.27	1.89	.69	1.50	2.13	1.57	.75	1.63	.43	.35	4.53	.59	3.50	7250	1.54	
12	1-1/16–12 UN	20	20	95	62	24,5	52	75	57	24,5	47,5	14	14	170	20	126	315	1,80	CBVT-3-U12-0001-M
	(3/4" SAE)		.79	3.74	2.44	.96	2.05	2.95	2.24	.96	1.87	.55	.55	6.69	.79	4.96	4500	3.96	
16	1-5/16–12 UN	25	25	113	66	29	61	83	65	29,5	56,5	14	14	170	20	134	315	2,40	CBVT-3-U16-0001-M
	(1" SAE)		.98	4.45	2.60	1.14	2.40	3.27	2.56	1.16	2.22	.55	.55	6.69	.79	5.73	4500	5.28	
20	1-5/8–12 UN	32	30	111	81	39		106	84,5	39	55	16,5	17	320	20	170	350	3,80	CBVT-3-U20-0001-M
	(1-1/4" SAE)		1.18	4.37	3.19	1.54		4.17	3.33	1.54	2.17	.65	.67	12.60	.79	6.69	5000	8.36	
24	1-7/8–12 UN	40	38	130	104	53		127	106	53	65	16,5	17	320	20	191	350	6,20	CBVT-3-U24-0001-M
	(1-1/2" SAE)		1.50	5.12	4.09	2.09		5.00	4.17	2.09	2.56	.65	.67	12.60	.79	7.52	5000	13.64	
32	2-1/2–12 UN	50	48	150	118	58	116	137	116	58	75	16,5	17	320	20	201	350	7,80	CBVT-3-U32-0001-M
	(2" SAE)		1.89	5.91	4.65	2.28	4.57	5.39	4.57	2.28	2.95	.65	.67	12.60	.79	7.91	5000	17.16	

Please note the pressure ratings of the tube connections.
Dimensions and design for stainless steel may vary.

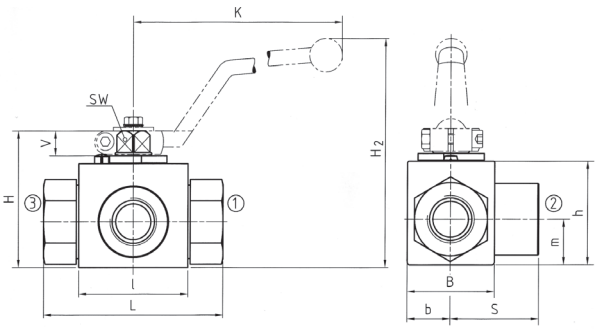

High-Pressure Block Body Ball Valve ▪ Type CBVT-3
T-Bore Three-Way Selector ▪ 24° Cone Connection
Light Series (DIN 2353 / ISO 8434-1)

24° Cone Connection (DIN 2353 / ISO 8434-1)

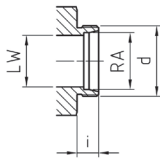

When ordering the standard option as indicated in the table below, the following materials will be supplied:

- Body, ball and stem: Carbon Steel
- Lever: Zinc (STAUFF Sizes 02 to 08)
  Carbon Steel (STAUFF Sizes 12 to 20R)
- Ball seat: Delrin® (POM)
- O-rings: FKM (Viton®)

Pressure Inlet only from the Center Port

Union nuts and cutting rings are not included in delivery.

STAUFF Size	Tube/Thread Size d	Nominal Size DN	Dimensions (mm/in) RA	LW	L	l	b	B	H	h	m	S	V	SW	K	i	H2	Nom. Pressure (bar/PSI)	Weight (kg/lbs)	Order Codes (Standard Option)
02	06L / M12 x 1,5	4	6	5	67	40	13	29	47	33	13,5	33,5	11	9	115	10	82	500	0,30	CBVT-3-06L-0001-M
			.24	.20	2.64	1.57	.51	1.14	1.85	1.30	.53	1.32	.43	.35	4.53	.39	3.23	7250	.66	
04	08L / M14 x 1,5	6	8	6	67	40	13	29	47	33	13,5	33,5	11	9	115	10	82	500	0,40	CBVT-3-08L-0001-M
			.31	.24	2.64	1.57	.51	1.14	1.85	1.30	.53	1.32	.43	.35	4.53	.39	3.23	7250	.88	
05	10L / M16 x 1,5	8	10	6	74	40	13	29	47	33	13,5	34,5	11	9	115	11	82	500	0,40	CBVT-3-10L-0001-M
			.39	.24	2.91	1.57	.51	1.14	1.85	1.30	.53	1.36	.43	.35	4.53	.43	3.23	7250	.88	
06	12L / M18 x 1,5	10	12	10	74	43	16	35	52	38	17,5	36,5	11	9	115	11	87	500	0,50	CBVT-3-12L-0001-M
			.47	.39	2.91	1.69	.63	1.38	2.05	1.50	.69	1.44	.43	.35	4.53	.43	3.42	7250	1.10	
08	15L / M22 x 1,5	13	15	13	82	48	17,5	38	54	40	19	41,5	11	9	115	12	89	500	0,65	CBVT-3-15L-0001-M
			.59	.51	3.23	1.89	.69	1.50	2.13	1.57	.75	1.63	.43	.35	4.53	.47	3.50	7250	1.43	
08	18L / M26 x 1,5	13	18	13	82	48	17,5	38	54	40	19	41,5	11	9	115	12	89	500	0,69	CBVT-3-18LDN13-0001-M
			.71	.51	2.23	1.89	.69	1.50	2.13	1.57	.75	1.63	.43	.35	4.53	.47	3.50	7250	1.52	
12	22L / M30 x 2	20	22	20	101	62	24,5	52	75	57	24,5	48	14	14	170	14	126	315	1,50	CBVT-3-22L-0001-M
			.87	.79	3.98	2.44	.96	2.05	2.95	2.24	.96	1.89	.55	.55	6.69	.55	4.96	4500	3.30	
16	28L / M36 x 2	25	28	25	108	66	29	61	83	65	29,5	54	14	14	170	14	134	315	2,10	CBVT-3-28L-0001-M
			1.10	.98	4.25	2.60	1.14	2.40	3.27	2.56	1.16	2.13	.55	.55	6.69	.55	5.73	4500	4.62	
20R	35L / M45 x 2	25/32	35	25	112	66	29	61	83	65	29,5	56	14	14	170	16	134	315	2,50	CBVT-3-35LDN25-0001-M
			1.38	.98	4.41	2.60	1.14	2.40	3.27	2.56	1.16	2.20	.55	.55	6.69	.63	5.73	4500	5.50	

Please note the pressure ratings of the tube connections.
Dimensions and design for stainless steel may vary.

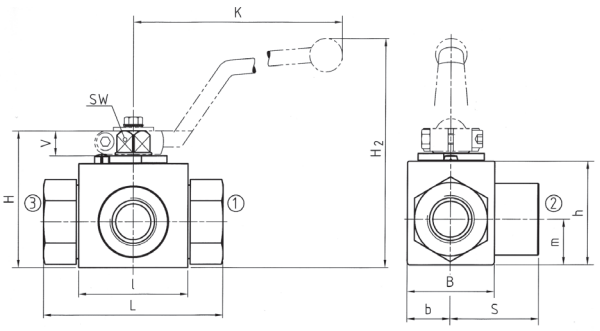

High-Pressure Block Body Ball Valve ▪ Type CBVT-3
T-Bore Three-Way Selector ▪ 24° Cone Connection
Heavy Series (DIN 2353 / ISO 8434-1)

24° Cone Connection (DIN 2353 / ISO 8434-1)

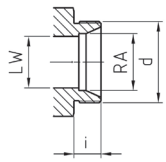

When ordering the standard option as indicated in the table below, the following materials will be supplied:

- Body, ball and stem: Carbon Steel
- Lever: Zinc (STAUFF Sizes 02 to 08)
  Carbon Steel (STAUFF Sizes 12 to 20R)
- Ball seat: Delrin® (POM)
- O-rings: FKM (Viton®)

Pressure Inlet only from the Center Port

Union nuts and cutting rings are not included in delivery.

STAUFF Size	Tube/Thread Size d	Nominal Size DN	Dimensions (mm/in) RA	LW	L	l	b	B	H	h	m	S	V	SW	K	i	H2	Nom. Pressure (bar/PSI)	Weight (kg/lbs)	Order Codes (Standard Option)
02	08S / M16 x 1,5	4	8	5	73	40	13	29	47	33	13,5	34,5	11	9	115	12	82	500	0,42	CBVT-3-08S-0001-M
			.31	.20	2.87	1.57	.51	1.14	1.85	1.30	.53	1.36	.43	.35	4.53	.47	3.23	7250	.92	
04	10S / M18 x 1,5	6	10	6	73	40	13	29	47	33	13,5	34,5	11	9	115	12	82	500	0,43	CBVT-3-10S-0001-M
			.39	.24	2.87	1.57	.51	1.14	1.85	1.30	.53	1.36	.43	.35	4.53	.47	3.23	7250	.95	
05	12S / M20 x 1,5	8	12	6	76	40	13	29	47	33	13,5	34,5	11	9	115	12	82	500	0,44	CBVT-3-12S-0001-M
			.47	.24	2.99	1.57	.51	1.14	1.85	1.30	.53	1.36	.43	.35	4.53	.47	3.23	7250	.97	
06	14S / M22 x 1,5	10	14	10	80	43	16	35	52	38	17,5	36,5	11	9	115	14	87	500	0,50	CBVT-3-14S-0001-M
			.55	.39	3.15	1.69	.63	1.38	2.05	1.50	.69	1.43	.43	.35	4.53	.55	3.42	7250	1.10	
08	16S / M24 x 1,5	13	16	13	86	48	17,5	38	54	40	19	43	11	9	115	14	89	500	0,65	CBVT-3-16S-0001-M
			.63	.51	3.39	1.89	.69	1.50	2.13	1.57	.75	1.69	.43	.35	4.53	.55	3.50	7250	1.43	
08	20S / M30 x 2	13	20	13	90	48	17,5	38	54	40	19	43	11	9	115	16	89	500	0,70	CBVT-3-20SDN13-0001-M
			.79	.51	3.54	1.89	.69	1.50	2.13	1.57	.75	1.69	.43	.35	4.53	.63	3.50	7250	1.54	
12	25S / M36 x 2	20	25	20	109	62	24,5	52	75	57	24,5	48	14	14	170	18	126	315	1,70	CBVT-3-25S-0001-M
			.98	.79	4.29	2.44	.96	2.05	2.95	2.24	.96	1.89	.55	.55	6.69	.71	4.96	4500	3.74	
16	30S / M42 x 2	25	30	25	120	66	29	61	83	65	29,5	57,5	14	14	170	20	134	315	2,40	CBVT-3-30S-0001-M
			1.18	.98	4.72	2.60	1.14	2.40	3.27	2.56	1.16	2.26	.55	.55	6.69	.79	5.73	4500	5.28	
20R	38S / M52 x 2	25/32	38	25	124	66	29	61	83	65	29,5	57,5	14	14	170	22	134	315	2,80	CBVT-3-38SDN25-0001-M
			1.50	.98	4.88	2.60	1.14	2.40	3.27	2.56	1.16	2.26	.55	.55	6.69	.87	5.73	4500	6.16	

Please note the pressure ratings of the tube connections.
Dimensions and design for stainless steel may vary.

B

High-Pressure Block Body Ball Valve ▪ Type CBVL-3-C

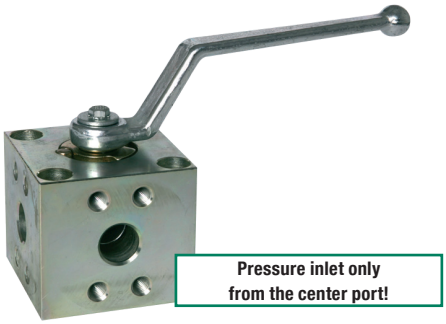

Characteristics

Compact three-way high-pressure block body ball valves designed for use as three-way selectors (L-bore, 90° operation) for hydraulic applications

Standard Construction
- Block body design for in-line assembly
- Compact diverter style
- Supplied with off-set lever

Standard Materials
- Body: Carbon Steel, zinc/iron-plated
- Ball: Carbon Steel, hard chrome-plated
- Stem: Carbon Steel
- Lever: Carbon Steel
- Ball seat: Delrin® (POM)
- O-rings: FKM (Viton®)

Standard Connections Styles / Sizes
- 6000 PSI (code 62) direct SAE flange connection
- Metric ISO and unified coarse (UNC) threads

Pressure inlet only from the center port!

Pressure Range
- Pressure range: up to 420 bar / 6000 PSI (depending on size and material combination of the ball valve)

Please note: The final maximum working pressure is determined by flange and pipe/tubing rating.

Temperature Range
- Operating temperature range: -20 °C ... +100 °C / -4 °F ... + 212 °F

Options / Accessories
- Flanges and flange kits (see catalogue STAUFF Flanges)
- Alternative lever designs/materials (see page 114)
- Locking devices (see pages 115-117)
- Actuator packages (see page 118)
- Limit switches (see page 118)
- Stainless Steel body
- Stainless Steel ball and stem
- Special ball seat and O-ring materials available for lower/higher temperatures and more aggressive media

Porting Pattern
- Symbol : L
- Overlap: negative
- Operating: 90°

P50

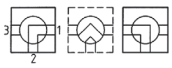

- Stop of end position:

Order Codes

CBVL	-	3	-	C6	08	M	-	0	0	0	1	-	M	-	-
①		②		③	④	⑤		⑥	⑦	⑧	⑨		⑩	⑪	⑫

① Type

Compact High-Pressure Block Body Ball Valve	**CBVL**

② Number of Ports

Three Ports (Three-Way Ball Valve)	**3**

③ Connection Style

6000 PSI (Code 62) SAE Direct Flange Connection	**C6**

Please contact STAUFF for alternative connection styles.

④ Connection Size

STAUFF Size (according to dimension table):

08	**12**	**16**	**20**	**24**	**32**

Please contact STAUFF for alternative connection sizes.

⑤ Thread Type

Flange Connection with Metric ISO Threads	**M**
Flange Connection with Unified Coarse (UNC) Threads	**U**

⑥ Body Material / Surface Finishing

Carbon Steel, zinc/iron-plated	**0**
Stainless Steel V4A (AISI 316Ti)	**1**

Note: Stainless steel version may vary in dimensions and design.
Alternative materials / surface finishings are available upon request. Contact STAUFF for further information.

⑦ Ball / Stem Material

Ball: Carbon Steel, hard chrome-plated Stem: Carbon Steel	**0**
Ball / Stem: Stainless Steel V4A (AISI 316Ti)	**1**

Alternative materials / surface finishings are available upon request. Contact STAUFF for further information.

⑧ Ball Seat Material

Delrin® (POM)	**0**

Alternative materials are available upon request. Contact STAUFF for further information.

⑨ O-Ring Material

NBR (Buna-N®)	**0**
FKM (Viton®)	**1**
EPDM	**3**

Alternative materials are available upon request. Contact STAUFF for further information.

⑩ Manufacturing Code

Manufacturing code for all connection styles	**M**

⑪ Lever Options

Supplied with standard lever (according to table)	**—**
Supplied without lever	**0**

Alternative levers can be ordered separately.
Please see page 114 for further information.

⑫ Accessories / Options

Supplied without accessories	**—**
Supplied with Locking Device LD4	**LD4**

Please see page 115-119 for further information and options.

High-Pressure Block Body Ball Valve ▪ Type CBVL-3-C
L-Bore Three-Way Selector ▪ 6000 PSI SAE Flange Connection (ISO 6162-2)

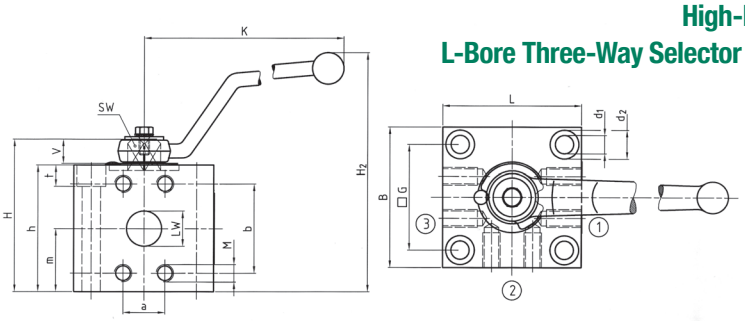

When ordering the standard option as indicated in the table below, the following materials will be supplied:

- Body, ball and stem: Carbon Steel
- Lever: Carbon Steel
- Ball seat: Delrin® (POM)
- O-rings: FKM (Viton®)

B

6000 PSI Series (Code 62) ▪ Metric ISO Threads

STAUFF Size	SAE Flange Size	Nominal Size DN	Dimensions (mm/in) LW	L	B	H	h	m	V	SW	K	a	b	M	G	d1	d2	t	H2	Nom. Pressure (bar/PSI)	Weight (kg/lbs)	Order Codes (Standard Option)
08	1/2	13	13	70	70	63	56	28	11	9	115	18,2	40,5	M8	43	8,5	13,5	9	101	420	2,00	CBVL-3-C608M-0001-M
			.51	2.76	2.76	2.48	2.20	1.10	.43	.35	4.53	.72	1.59		1.69	.33	.53	.35	3.98	6000	4.40	
12	3/4	20	20	80	80	87	72	36	14	14	170	23,8	50,8	M10	60	10,5	16,5	11	137	420	3,40	CBVL-3-C612M-0001-M
			.79	3.15	3.15	3.43	2.83	1.42	.55	.55	6.69	.94	2.00		2.36	.41	.65	.43	5.39	6000	7.48	
16	1	25	25	94	94	96	81	42	14	14	170	27,8	57,2	M12	70	10,5	16,5	11	147	420	5,40	CBVL-3-C616M-0001-M
			.98	3.70	3.70	3.78	3.19	1.65	.55	.55	6.69	1.09	2.25		2.76	.41	.65	.43	5.79	6000	11.88	
20	1-1/4	32	30	100	100	117	100	50,5	16,5	17	306	31,8	66,6	M12	76	13	19	13	181	420	6,80	CBVL-3-C620M-0001-M
			1.18	3.94	3.94	4.61	3.94	1.99	.65	.67	12.05	1.25	2.62		2.99	.51	.75	.51	7.13	6000	14.96	
24	1-1/2	40	32	110	110	136	115	55	16,5	17	306	36,5	79,4	M16	84	13	19	13	193	420	10,20	CBVL-3-C624RM-0001-M
			1.26	4.33	4.33	5.35	4.53	2.17	.65	.67	12.05	1.44	3.13		3.31	.51	.75	.51	7.60	6000	22.44	
32	2	50	48	135	135	147	135	67,5	16,5	17	306	44,5	96,8	M20	108	13	19	13	211	420	18,50	CBVL-3-C632M-0001-M
			1.89	5.31	5.31	5.79	5.31	2.66	.65	.67	12.05	1.75	3.81		4.25	.51	.75	.51	8.31	6000	40.70	

Dimensions and design for stainless steel may vary.

6000 PSI Series (Code 62) ▪ Unified Coarse (UNC) Threads

STAUFF Size	SAE Flange Size	Nominal Size DN	Dimensions (mm/in) LW	L	B	H	h	m	V	SW	K	a	b	M	G	d1	d2	t	H2	Nom. Pressure (bar/PSI)	Weight (kg/lbs)	Order Codes (Standard Option)
08	1/2	13	13	70	70	63	56	28	11	9	115	18,2	40,5	5/16–18 UNC	43	8,5	13,5	9	101	420	2,00	CBVL-3-C608U-0001-M
			.51	2.76	2.76	2.48	2.20	1.10	.43	.35	4.53	.72	1.59		1.69	.33	.53	.35	3.98	6000	4.40	
12	3/4	20	20	80	80	87	72	36	14	14	170	23,8	50,8	3/8–16 UNC	60	10,5	16,5	11	137	420	3,40	CBVL-3-C612U-0001-M
			.79	3.15	3.15	3.43	2.83	1.42	.55	.55	6.69	.94	2.00		2.36	.41	.65	.43	5.39	6000	7.48	
16	1	25	25	94	94	96	81	42	14	14	170	27,8	57,2	7/16–14 UNC	70	10,5	16,5	11	147	420	5,40	CBVL-3-C616U-0001-M
			.98	3.70	3.70	3.78	3.19	1.65	.55	.55	6.69	1.09	2.25		2.76	.41	.65	.43	5.79	6000	11.88	
20	1-1/4	32	30	100	100	117	100	50,5	16,5	17	306	31,8	66,6	1/2–13 UNC	76	13	19	13	181	420	6,80	CBVL-3-C620U-0001-M
			1.18	3.94	3.94	4.61	3.94	1.99	.65	.67	12.05	1.25	2.62		2.99	.51	.75	.51	7.13	6000	14.96	
24	1-1/2	40	32	110	110	136	115	55	16,5	17	306	36,5	79,4	5/8–11 UNC	84	13	19	13	193	420	10,20	CBVL-3-C624RU-0001-M
			1.26	4.33	4.33	5.35	4.53	2.17	.65	.67	12.05	1.44	3.13		3.31	.51	.75	.51	7.60	6000	22.44	
32	2	50	48	135	135	147	135	67,5	16,5	17	306	44,5	96,8	3/4–10 UNC	108	13	19	13	211	420	18,50	CBVL-3-C632U-0001-M
			1.89	5.31	5.31	5.79	5.31	2.66	.65	.67	12.05	1.75	3.81		4.25	.51	.75	.51	8.31	6000	40.70	

Please note: The final maximum working pressure is determined by flange and pipe/tubing rating.
Dimensions and design for stainless steel may vary.

B

High-Pressure Block Body Ball Valve ▪ Type CBVSL-3

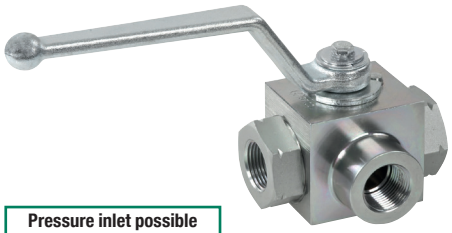

Pressure inlet possible from all ports!

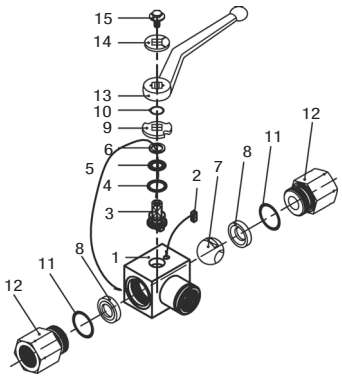

List of Components

No.	Qty.	Description
1	1	Body
2	1	Stop Pin
3*	1	Stem
4*	1	Thrust Ring
5*	1	Stem O-Ring
6*	1	Stem Back Up Ring
7	1	Ball
8*	2	Ball Seat
9	1	Cam Plate
10	1	Snap Ring
11*	2	Connector O-Ring
12	2	Connector
13	1	Handle
14	1	Flow Indicator
15	1	Stem Bolt

Characteristics

Compact three-way high-pressure block body ball valves designed for use as three-way selectors (L-bore, 90° operation) for hydraulic applications

Standard Construction
- Block body design for in-line assembly
- Compact diverter style
- Supplied with off-set lever

Standard Materials
- Body: Carbon Steel, zinc/iron-plated
- Ball: Carbon Steel, hard chrome-plated
- Stem: Carbon Steel
- Lever: Zinc (STAUFF Sizes 02 to 08)
  Carbon Steel (STAUFF Sizes 12 to 32)
- Ball seat: Delrin® (POM) Frontside Sealing
- O-rings: FKM (Viton®)

Standard Connections Styles / Sizes
- Female BSP thread (DIN ISO 228) >G 2 BSP
- Female NPT thread (ANSI B1.20.1) >2 NPT
- Female UN/UNF thread (SAE J 514) >2-1/2–12 UN (2" SAE)
- 24° Cone Connection (DIN 2353 / ISO 8434-1) >35L
- 24° Cone Connection (DIN 2353 / ISO 8434-1) >38S

Pressure inlet possible from all ports!
Must be operated without pressure!

Pressure Range
- Pressure range: up to 500 bar / 7250 PSI (depending on size and material combination of the ball valve)

Temperature Range
- Operating temperature range:
  -20 °C ... +100 °C / -4 °F ... + 212 °F

Options / Accessories
- Alternative lever designs/materials (see page 114)
- Locking devices (see pages 115-117)
- Actuator packages (see page 118)
- Limit switches (see page 118)
- Additional assembling threads / holes (see page 119)
- Stainless Steel body
- Stainless Steel ball and stem
- Special ball seat and O-ring materials available for lower/higher temperatures and more aggressive media
- Seal kits (including items marked by * in the above list)

Porting Pattern
- Symbol : L
- Overlap: negative
- Operating: 90°

P55

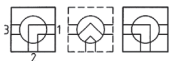

- Stop of end position:

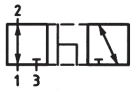

Order Codes

CBVSL	-	3	-	G	02	-	0	0	8	1	-	M	-	-
①		②		③	④		⑤	⑥	⑦	⑧		⑨	⑩	⑪

① Type

Compact High-Pressure Block Body Ball Valve with Pressure Inlet Possible from all Ports	CBVSL

② Number of Ports

Three Ports (Three-Way Ball Valve)	3

③ Connection Style

Female BSP Thread (DIN ISO 228)	G
Female NPT Thread (ANSI B1.20.1)	N
Female UN/UNF Thread (SAE J 514)	U
24° Cone Connection (Light / Heavy Series)	—

Please contact STAUFF for alternative connection styles.

④ Connection Size

STAUFF Size (according to dimension table) for connection styles G, N and U:

02	04	06	08	12	16	20	24	32

Tube Size (according to dimension table) for 24° Cone Connection (Light Series):

06L	08L	10L	12L	15L	18L	22L	28L	35L

Tube Size (according to dimension table) for 24° Cone Connection (Heavy Series):

08S	10S	12S	14S	16S	20S	25S	30S	38S

Please contact STAUFF for alternative connection sizes.

⑤ Body Material / Surface Finishing

Carbon Steel, zinc/iron-plated	0
Carbon Steel, zinc/nickel-plated	8
Stainless Steel V4A (AISI 316Ti)	1

Note: Stainless steel version may vary in dimensions and design.
Alternative materials / surface finishings are available upon request. Contact STAUFF for further information.

⑥ Ball / Stem Material

Ball: Carbon Steel, hard chrome-plated Stem: Carbon Steel	0
Ball / Stem: Stainless Steel V4A (AISI 316Ti)	1

Alternative materials / surface finishings are available upon request. Contact STAUFF for further information.

⑦ Ball Seat Material

Delrin® (POM) Frontside Sealing	8

Alternative materials are available upon request. Contact STAUFF for further information.

⑧ O-Ring Material

NBR (Buna-N®)	0
FKM (Viton®)	1
EPDM	3

Alternative materials are available upon request. Contact STAUFF for further information.

⑨ Manufacturing Code

Manufacturing code for all connection styles	M

⑩ Lever Options

Supplied with standard lever (according to table)	—
Supplied without lever	0

Alternative levers can be ordered separately. Please see page 114 for further information.

⑪ Accessories / Options

Supplied without accessories	—
Supplied with Locking Device LD1	LD1
Supplied with Locking Device LD4	LD4

Please see page 115-119 for further information and options.

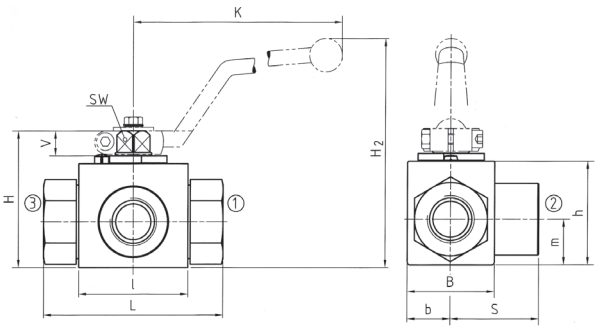

High-Pressure Block Body Ball Valve ▪ Type CBVSL-3
L-Bore Three-Way Selector ▪ Female BSP Thread (DIN ISO 228)

Female BSP Thread (DIN ISO 228)

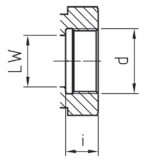

When ordering the standard option as indicated in the table below, the following materials will be supplied:

- Body, ball and stem: Carbon Steel
- Lever: Zinc (STAUFF Sizes 02 to 08)
  Carbon Steel (STAUFF Sizes 12 to 32)
- Ball seat: Delrin® (POM) Frontside Sealing
- O-rings: FKM (Viton®)

From DN32, STAUFF size 20 made from one block

Pressure Inlet possible from all Ports

STAUFF Size	Thread Size d	Nominal Size DN	Dimensions (mm/in) LW	L	l	b	B	H	h	m	S	V	SW	K	i	H2	Nom. Pressure (bar/PSI)	Weight (kg/lbs)	Order Codes (Standard Option)
02	G 1/8 BSP	4	5	69	40	13	29	47	33	13,5	34,5	11	9	115	10	82	500	0,40	CBVSL-3-G02-0081-M
			.20	2.72	1.57	.51	1.14	1.85	1.30	.53	1.36	.43	.35	4.53	.39	3.23	7250	.88	
04	G 1/4 BSP	6	6	69	40	13	29	47	33	13,5	34,5	11	9	115	14	82	500	0,46	CBVSL-3-G04-0081-M
			.24	2.72	1.57	.51	1.14	1.85	1.30	.53	1.36	.43	.35	4.53	.55	3.23	7250	1.01	
06	G 3/8 BSP	10	10	72	43	16	35	52	38	17,5	36	11	9	115	14	87	500	0,60	CBVSL-3-G06-0081-M
			.39	2.83	1.69	.63	1.38	2.05	1.50	.69	1.42	.43	.35	4.53	.55	3.42	7250	1.32	
08	G 1/2 BSP	13	13	83	48	17,5	38	54	40	19	41,5	11	9	115	16,3	89	315	0,70	CBVSL-3-G08-0081-M
			.51	3.27	1.89	.69	1.50	2.13	1.57	.75	1.63	.43	.35	4.53	.64	3.50	4500	1.54	
12	G 3/4BSP	20	20	95	62	24,5	52	75	57	24,5	47,5	14	14	170	18	126	315	1,80	CBVSL-3-G12-0081-M
			.79	3.74	2.44	.96	2.05	2.95	2.24	.96	1.87	.55	.55	6.69	.71	4.96	4500	3.96	
16	G 1 BSP	25	25	113	66	29	61	83	65	29,5	56,5	14	14	170	20	134	315	2,40	CBVSL-3-G16-0081-M
			.98	4.45	2.60	1.14	2.40	3.27	2.56	1.16	2.22	.55	.55	6.69	.79	5.73	4500	5.28	
20	G 1-1/4 BSP	32	30	111	81	39		106	84,5	39	55	16,5	17	320	22	170	350	3,80	CBVSL-3-G20-0081-M
			1.18	4.37	3.19	1.54		4.17	3.33	1.54	2.17	.65	.67	12.60	.87	6.69	5000	8.36	
24	G 1-1/2 BSP	40	38	130	104	53		127	106	53	65	16,5	17	320	24	191	350	6,20	CBVSL-3-G24-0081-M
			1.50	5.12	4.09	2.09		5.00	4.17	2.09	2.56	.65	.67	12.60	.94	7.52	5000	13.64	
32	G 2 BSP	50	48	150	118	58	116	137	116	58	75	16,5	17	320	26	201	350	7,80	CBVSL-3-G32-0081-M
			1.89	5.91	4.65	2.28	4.57	5.39	4.57	2.28	2.95	.65	.67	12.60	1.02	7.91	5000	17.16	

Please note the pressure ratings of the tube connections.
Dimensions and design for stainless steel may vary.

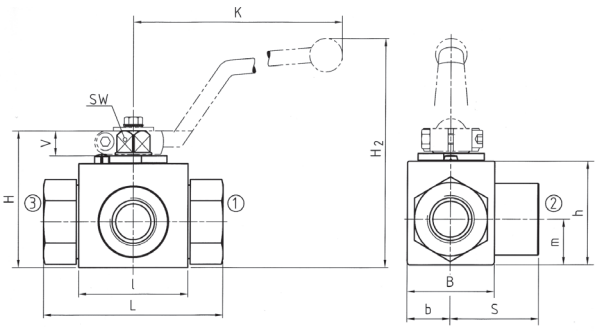

High-Pressure Block Body Ball Valve ▪Type CBVSL-3
L-Bore Three-Way Selector ▪Female NPT Thread (ANSI B1.20.1)

Female NPT Thread (ANSI B1.20.1)

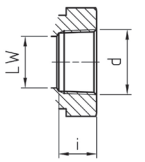

When ordering the standard option as indicated in the table below, the following materials will be supplied:

- Body, ball and stem: Carbon Steel
- Lever: Zinc (STAUFF Sizes 02 to 08)
  Carbon Steel (STAUFF Sizes 12 to 32)
- Ball seat: Delrin® (POM) Frontside Sealing
- O-rings: FKM (Viton®)

From DN32, STAUFF size 20 made from one block

Pressure Inlet possible from all Ports

STAUFF Size	Thread Size d	Nominal Size DN	Dimensions (mm/in) LW	L	l	b	B	H	h	K	S	V	SW	K	i	H2	Nom. Pressure (bar/PSI)	Weight (kg/lbs)	Order Codes (Standard Option)
02	1/8 NPT	4	5	69	40	13	29	47	33	13,5	34,5	11	9	115	10,5	82	500	0,40	CBVSL-3-N02-0081-M
			.20	2.72	1.57	.51	1.14	1.85	1.30	.53	1.36	.43	.35	4.53	.41	3.23	7250	.88	
04	1/4 NPT	6	6	69	40	13	29	47	33	13,5	34,5	11	9	115	13,7	82	500	0,46	CBVSL-3-N04-0081-M
			.24	2.72	1.57	.51	1.14	1.85	1.30	.53	1.36	.43	.35	4.53	.54	3.23	7250	1.01	
06	3/8 NPT	10	10	72	43	16	35	52	38	17,5	36	11	9	115	13,5	87	500	0,60	CBVSL-3-N06-0081-M
			.39	2.83	1.69	.63	1.38	2.05	1.50	.69	1.42	.43	.35	4.53	.53	3.42	7250	1.32	
08	1/2 NPT	13	13	83	48	17,5	38	54	40	19	41,5	11	9	115	17	89	315	0,70	CBVSL-3-N08-0081-M
			.51	3.27	1.89	.69	1.50	2.13	1.57	.75	1.63	.43	.35	4.53	.67	3.50	4500	1.54	
12	3/4NPT	20	20	95	62	24,5	52	75	57	24,5	47,5	14	14	170	18,3	126	315	1,80	CBVSL-3-N12-0081-M
			.79	3.74	2.44	.96	2.05	2.95	2.24	.96	1.87	.55	.55	6.69	.72	4.96	4500	3.96	
16	1 NPT	25	25	113	66	29	61	83	65	29,5	56,5	14	14	170	21,6	134	315	2,40	CBVSL-3-N16-0081-M
			.98	4.45	2.60	1.14	2.40	3.27	2.56	1.16	2.22	.55	.55	6.69	.85	5.73	4500	5.28	
20	1-1/4 NPT	32	30	120	81	39		106	84,5	39	55	16,5	17	320	22,1	170	350	3,80	CBVSL-3-N20-0081-M
			1.18	4.72	3.19	1.54		4.17	3.33	1.54	2.17	.65	.67	12.60	.87	6.69	5000	8.36	
24	1-1/2 NPT	40	38	140	104	53		127	106	53	65	16,5	17	320	22,1	191	350	6,20	CBVSL-3-N24-0081-M
			1.50	5.51	4.09	2.09		5.00	4.17	2.09	2.56	.65	.67	12.60	.87	7.52	5000	13.64	
32	2 NPT	50	48	150	118	58	116	137	116	58	75	16,5	17	320	30,2	201	350	7,80	CBVSL-3-N32-0081-M
			1.89	5.91	4.65	2.28	4.57	5.39	4.57	2.28	2.95	.65	.67	12.60	1.19	7.91	5000	17.16	

Please note the pressure ratings of the tube connections.
Dimensions and design for stainless steel may vary.

B

High-Pressure Block Body Ball Valve ▪ Type CBVSL-3
L-Bore Three-Way Selector ▪ Female UN/UNF Thread (SAE J 514)

When ordering the standard option as indicated in the table below, the following materials will be supplied:

- Body, ball and stem: Carbon Steel
- Lever: Zinc (STAUFF Sizes 04 to 08)
  Carbon Steel (STAUFF Sizes 12 to 32)
- Ball seat: Delrin® (POM) Frontside Sealing
- O-rings: FKM (Viton®)

From DN32, STAUFF size 20 made from one block

Female UN/UNF Thread (SAE J 514)

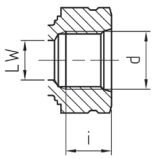

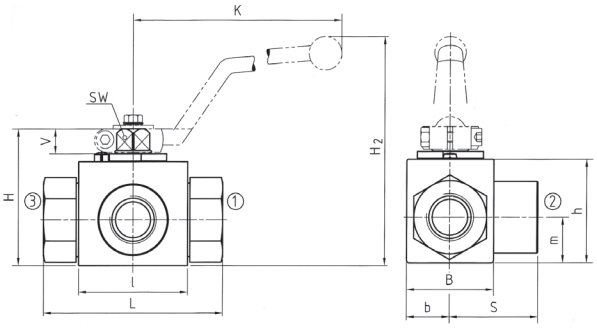

Pressure Inlet possible from all Ports

STAUFF Size	Thread Size d	Nominal Size DN	Dimensions (mm/in) LW	L	l	b	B	H	h	K	S	V	SW	K	i	H2	Nom. Pressure (bar/PSI)	Weight (kg/lbs)	Order Codes (Standard Option)
04	7/16–20 UNF	6	5	69	40	13	29	47	33	13,5	34,5	11	9	115	12	82	500	0,46	CBVSL-3-U04-0081-M
	(1/4" SAE)		.20	2.72	1.57	.51	1.14	1.85	1.30	.53	1.36	.43	.35	4.53	.47	3.23	7250	1.01	
06	9/16–18 UNF	10	10	72	43	16	35	52	38	17,5	36	11	9	115	13	87	500	0,60	CBVSL-3-U06-0081-M
	(3/8" SAE)		.39	2.83	1.69	.63	1.38	2.05	1.50	.69	1.42	.43	.35	4.53	.51	3.42	7250	1.32	
08	3/4–16 UNF	13	13	83	48	17,5	38	54	40	19	41,5	11	9	115	15	89	315	0,70	CBVSL-3-U08-0081-M
	(1/2" SAE)		.51	3.27	1.89	.69	1.50	2.13	1.57	.75	1.63	.43	.35	4.53	.59	3.50	4500	1.54	
12	1-1/16–12 UN	20	20	95	62	24,5	52	75	57	24,5	47,5	14	14	170	20	126	315	1,80	CBVSL-3-U12-0081-M
	(3/4" SAE)		.79	3.74	2.44	.96	2.05	2.95	2.24	.96	1.87	.55	.55	6.69	.79	4.96	4500	3.96	
16	1-5/16–12 UN	25	25	113	66	29	61	83	65	29,5	56,5	14	14	170	20	134	315	2,40	CBVSL-3-U16-0081-M
	(1" SAE)		.98	4.45	2.60	1.14	2.40	3.27	2.56	1.16	2.22	.55	.55	6.69	.79	5.73	4500	5.28	
20	1-5/8–12 UN	32	30	111	81	39		106	84,5	39	55	16,5	17	320	20	170	350	3,80	CBVSL-3-U20-0081-M
	(1-1/4" SAE)		1.18	4.37	3.19	1.54		4.17	3.33	1.54	2.17	.65	.67	12.60	.79	6.69	5000	8.36	
24	1-7/8–12 UN	40	38	130	104	53		127	106	53	65	16,5	17	320	20	191	350	6,20	CBVSL-3-U24-0081-M
	(1-1/2" SAE)		1.50	5.12	4.09	2.09		5.00	4.17	2.09	2.56	.65	.67	12.60	.79	7.52	5000	13.64	
32	2-1/2–12 UN	50	48	150	118	58	116	137	116	58	75	16,5	17	320	20	201	350	7,80	CBVSL-3-U32-0081-M
	(2" SAE)		1.89	5.91	4.65	2.28	4.57	5.39	4.57	2.28	2.95	.65	.67	12.60	.79	7.91	5000	17.16	

Please note the pressure ratings of the tube connections.
Dimensions and design for stainless steel may vary.

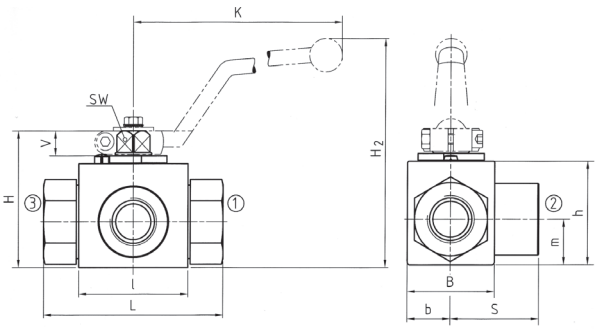

High-Pressure Block Body Ball Valve ▪ Type CBVSL-3
L-Bore Three-Way Selector ▪ 24° Cone Connection
Light Series (DIN 2353 / ISO 8434-1)

24° Cone Connection (DIN 2353 / ISO 8434-1)

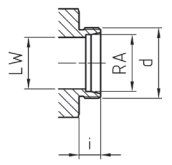

When ordering the standard option as indicated in the table below, the following materials will be supplied:

- Body, ball and stem: Carbon Steel
- Lever: Zinc (STAUFF Sizes 02 to 08)
  Carbon Steel (STAUFF Sizes 12 to 20R)
- Ball seat: Delrin® (POM) Frontside Sealing
- O-rings: FKM (Viton®)

Pressure Inlet possible from all Ports

Union nuts and cutting rings are not included in delivery.

STAUFF Size	Tube/Thread Size d	Nominal Size DN	Dimensions (mm/in) RA	LW	L	l	b	B	H	h	m	S	V	SW	K	i	H2	Nom. Pressure (bar/PSI)	Weight (kg/lbs)	Order Codes (Standard Option)
02	06L / M12 x 1,5	4	6	5	67	40	13	29	47	33	13,5	33,5	11	9	115	10	82	500	0,30	CBVSL-3-06L-0081-M
			.24	.20	2.64	1.57	.51	1.14	1.85	1.30	.53	1.32	.43	.35	4.53	.39	3.23	7250	.66	
04	08L / M14 x 1,5	6	8	6	67	40	13	29	47	33	13,5	33,5	11	9	115	10	82	500	0,40	CBVSL-3-08L-0081-M
			.31	.24	2.64	1.57	.51	1.14	1.85	1.30	.53	1.32	.43	.35	4.53	.39	3.23	7250	.88	
05	10L / M16 x 1,5	8	10	6	74	40	13	29	47	33	13,5	34,5	11	9	115	11	82	500	0,40	CBVSL-3-10L-0081-M
			.39	.24	2.91	1.57	.51	1.14	1.85	1.30	.53	1.36	.43	.35	4.53	.43	3.23	7250	.88	
06	12L / M18 x 1,5	10	12	10	74	43	16	35	52	38	17,5	36,5	11	9	115	11	87	500	0,50	CBVSL-3-12L-0081-M
			.47	.39	2.91	1.69	.63	1.38	2.05	1.50	.69	1.44	.43	.35	4.53	.43	3.42	7250	1.10	
08	15L / M22 x 1,5	13	15	13	82	48	17,5	38	54	40	19	41,5	11	9	115	12	89	315	0,65	CBVSL-3-15L-0081-M
			.59	.51	3.23	1.89	.69	1.50	2.13	1.57	.75	1.63	.43	.35	4.53	.47	3.50	4500	1.43	
08	18L / M26 x 1,5	13	18	13	82	48	17,5	38	54	40	19	41,5	11	9	115	12	89	315	0,69	CBVSL-3-18L-0081-M
			.71	.51	2.23	1.89	.69	1.50	2.13	1.57	.75	1.63	.43	.35	4.53	.47	3.50	4500	1.52	
12	22L / M30 x 2	20	22	20	101	62	24,5	52	75	57	24,5	48	14	14	170	14	126	315	1,50	CBVSL-3-22L-0081-M
			.87	.79	3.98	2.44	.96	2.05	2.95	2.24	.96	1.89	.55	.55	6.69	.55	4.96	4500	3.30	
16	28L / M36 x 2	25	28	25	108	66	29	61	83	65	29,5	54	14	14	170	14	134	315	2,10	CBVSL-3-28L-0081-M
			1.10	.98	4.25	2.60	1.14	2.40	3.27	2.56	1.16	2.13	.55	.55	6.69	.55	5.73	4500	4.62	
20R	35L / M45 x 2	25/32	35	25	112	66	29	61	83	65	29,5	56	14	14	170	16	134	315	2,50	CBVSL-3-35LDN25-0081-M
			1.38	.98	4.41	2.60	1.14	2.40	3.27	2.56	1.16	2.20	.55	.55	6.69	.63	5.73	4500	5.50	

Please note the pressure ratings of the tube connections.
Dimensions and design for stainless steel may vary.

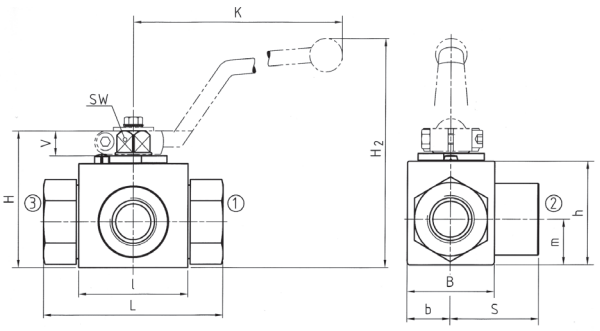

High-Pressure Block Body Ball Valve ▪ Type CBVSL-3
L-Bore Three-Way Selector ▪ 24° Cone Connection
Heavy Series (DIN 2353 / ISO 8434-1)

24° Cone Connection (DIN 2353 / ISO 8434-1)

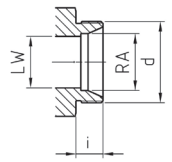

When ordering the standard option as indicated in the table below, the following materials will be supplied:

- Body, ball and stem: Carbon Steel
- Lever: Zinc (STAUFF Sizes 02 to 08)
  Carbon Steel (STAUFF Sizes 12 to 20R)
- Ball seat: Delrin® (POM) Frontside Sealing
- O-rings: FKM (Viton®)

Pressure Inlet possible from all Ports

Union nuts and cutting rings are not included in delivery.

STAUFF Size	Tube/Thread Size d	Nominal Size DN	Dimensions (mm/in) RA	LW	L	l	b	B	H	h	m	S	V	SW	K	i	H2	Nom. Pressure (bar/PSI)	Weight (kg/lbs)	Order Codes (Standard Option)
02	08S / M16 x 1,5	4	8	5	73	40	13	29	47	33	13,5	34,5	11	9	115	12	82	500	0,42	CBVSL-3-08S-0081-M
			.31	.20	2.87	1.57	.51	1.14	1.85	1.30	.53	1.36	.43	.35	4.53	.47	3.23	7250	.92	
04	10S / M18 x 1,5	6	10	6	73	40	13	29	47	33	13,5	34,5	11	9	115	12	82	500	0,43	CBVSL-3-10S-0081-M
			.39	.24	2.87	1.57	.51	1.14	1.85	1.30	.53	1.36	.43	.35	4.53	.47	3.23	7250	.95	
05	12S / M20 x 1,5	8	12	6	76	40	13	29	47	33	13,5	34,5	11	9	115	12	82	500	0,44	CBVSL-3-12S-0081-M
			.47	.24	2.99	1.57	.51	1.14	1.85	1.30	.53	1.36	.43	.35	4.53	.47	3.23	7250	.97	
06	14S / M22 x 1,5	10	14	10	80	43	16	35	52	38	17,5	36,5	11	9	115	14	87	500	0,50	CBVSL-3-14S-0081-M
			.55	.39	3.15	1.69	.63	1.38	2.05	1.50	.69	1.43	.43	.35	4.53	.55	3.42	7250	1.10	
08	16S / M24 x 1,5	13	16	13	86	48	17,5	38	54	40	19	43	11	9	115	14	89	315	0,65	CBVSL-3-16S-0081-M
			.63	.51	3.39	1.89	.69	1.50	2.13	1.57	.75	1.69	.43	.35	4.53	.55	3.50	4500	1.43	
08	20S / M30 x 2	13	20	13	90	48	17,5	38	54	40	19	43	11	9	115	16	89	315	0,70	CBVSL-3-20SDN13-0081-M
			.79	.51	3.54	1.89	.69	1.50	2.13	1.57	.75	1.69	.43	.35	4.53	.63	3.50	4500	1.54	
12	25S / M36 x 2	20	25	20	109	62	24,5	52	75	57	24,5	48	14	14	170	18	126	315	1,70	CBVSL-3-25S-0081-M
			.98	.79	4.29	2.44	.96	2.05	2.95	2.24	.96	1.89	.55	.55	6.69	.71	4.96	4500	3.74	
16	30S / M42 x 2	25	30	25	120	66	29	61	83	65	29,5	57,5	14	14	170	20	134	315	2,40	CBVSL-3-30S-0081-M
			1.18	.98	4.72	2.60	1.14	2.40	3.27	2.56	1.16	2.26	.55	.55	6.69	.79	5.73	4500	5.28	
20R	38S / M52 x 2	25/32	38	25	124	66	29	61	83	65	29,5	57,5	14	14	170	22	134	315	2,80	CBVSL-3-38SDN25-0081-M
			1.50	.98	4.88	2.60	1.14	2.40	3.27	2.56	1.16	2.26	.55	.55	6.69	.87	5.73	4500	6.16	

Please note the pressure ratings of the tube connections.
Dimensions and design for stainless steel may vary.

B

High-Pressure Block Body Ball Valve ▪ Type CBVST-3

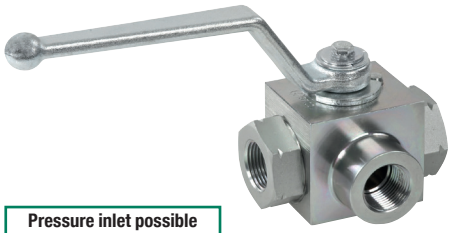

Pressure inlet possible from all ports!

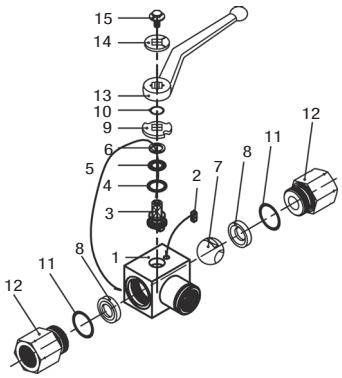

List of Components

No.	Qty.	Description
1	1	Body
2	1	Stop Pin
3*	1	Stem
4*	1	Thrust Ring
5*	1	Stem O-Ring
6*	1	Stem Back Up Ring
7	1	Ball
8*	2	Ball Seat
9	1	Cam Plate
10	1	Snap Ring
11*	2	Connector O-Ring
12	2	Connector
13	1	Handle
14	1	Flow Indicator
15	1	Stem Bolt

Characteristics

Compact three-way high-pressure block body ball valves designed for use as three-way selectors (T-bore, 90° operation) for hydraulic applications

Standard Construction
- Block body design for in-line assembly
- Compact diverter style
- Supplied with off-set lever

Standard Materials
- Body: Carbon Steel, zinc/iron-plated
- Ball: Carbon Steel, hard chrome-plated
- Stem: Carbon Steel
- Lever: Zinc (STAUFF Sizes 02 to 08)
  Carbon Steel (STAUFF Sizes 12 to 32)
- Ball seat: Delrin® (POM) Frontside Sealing
- O-rings: FKM (Viton®)

Standard Connections Styles / Sizes
- Female BSP thread (DIN ISO 228) >G 2 BSP
- Female NPT thread (ANSI B1.20.1) >2 NPT
- Female UN/UNF thread (SAE J 514) >2-1/2–12 UN (2" SAE)
- 24° Cone Connection (DIN 2353 / ISO 8434-1) >35L
- 24° Cone Connection (DIN 2353 / ISO 8434-1) >38S

Pressure inlet possible from all ports!
Must be operated without pressure!

Pressure Range
- Pressure range: up to 500 bar / 7250 PSI (depending on size and material combination of the ball valve)

Temperature Range
- Operating temperature range:
  -20 °C ... +100 °C / -4 °F ... + 212 °F

Options / Accessories
- Alternative lever designs/materials (see page 114)
- Locking devices (see pages 115-117)
- Actuator packages (see page 118)
- Limit switches (see page 118)
- Additional assembling threads / holes (see page 119)
- Stainless Steel body
- Stainless Steel ball and stem
- Special ball seat and O-ring materials available for lower/higher temperatures and more aggressive media
- Seal kits (including items marked by * in the above list)

Porting Pattern
- Symbol : T
- Overlap: negative
- Operating: 90°

P56

- Stop of end position:

Order Codes

CBVST	-	3	-	G	02	-	0	0	8	1	-	M	-	-
①		②		③	④		⑤	⑥	⑦	⑧		⑨	⑩	⑪

① Type

Compact High-Pressure Block Body Ball Valve with Pressure Inlet Possible from all Ports	CBVST

② Number of Ports

Three Ports (Three-Way Ball Valve)	3

③ Connection Style

Female BSP Thread (DIN ISO 228)	G
Female NPT Thread (ANSI B1.20.1)	N
Female UN/UNF Thread (SAE J 514)	U
24° Cone Connection (Light / Heavy Series)	—

Please contact STAUFF for alternative connection styles.

④ Connection Size

STAUFF Size (according to dimension table) for connection styles G, N and U:

02	04	06	08	12	16	20	24	32

Tube Size (according to dimension table) for 24° Cone Connection (Light Series):

06L	08L	10L	12L	15L	18L	22L	28L	35L

Tube Size (according to dimension table) for 24° Cone Connection (Heavy Series):

08S	10S	12S	14S	16S	20S	25S	30S	38S

Please contact STAUFF for alternative connection sizes.

⑤ Body Material / Surface Finishing

Carbon Steel, zinc/iron-plated	0
Carbon Steel, zinc/nickel-plated	8
Stainless Steel V4A (AISI 316Ti)	1

Note: Stainless steel version may vary in dimensions and design.
Alternative materials / surface finishings are available upon request. Contact STAUFF for further information.

⑥ Ball / Stem Material

Ball: Carbon Steel, hard chrome-plated Stem: Carbon Steel	0
Ball / Stem: Stainless Steel V4A (AISI 316Ti)	1

Alternative materials / surface finishings are available upon request. Contact STAUFF for further information.

⑦ Ball Seat Material

Delrin® (POM) Frontside Sealing	8

Alternative materials are available upon request. Contact STAUFF for further information.

⑧ O-Ring Material

NBR (Buna-N®)	0
FKM (Viton®)	1
EPDM	3

Alternative materials are available upon request. Contact STAUFF for further information.

⑨ Manufacturing Code

Manufacturing code for all connection styles	M

⑩ Lever Options

Supplied with standard lever (according to table)	—
Supplied without lever	0

Alternative levers can be ordered separately. Please see page 114 for further information.

⑪ Accessories / Options

Supplied without accessories	—
Supplied with Locking Device LD1	LD1
Supplied with Locking Device LD4	LD4

Please see page 115-119 for further information and options.

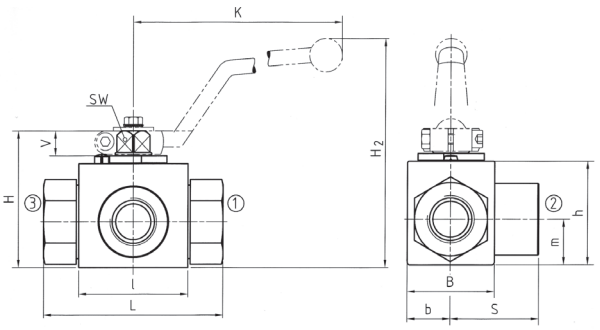

High-Pressure Block Body Ball Valve ▪ Type CBVST-3
T-Bore Three-Way Selector ▪ Female BSP Thread (DIN ISO 228)

Female BSP Thread (DIN ISO 228)

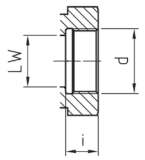

When ordering the standard option as indicated in the table below, the following materials will be supplied:

- Body, ball and stem: Carbon Steel
- Lever: Zinc (STAUFF Sizes 02 to 08)
  Carbon Steel (STAUFF Sizes 12 to 32)
- Ball seat: Delrin® (POM) Frontside Sealing

O-rings: FKM (Viton®)

From DN32, STAUFF size 20 made from one block

Pressure Inlet possible from all Ports

STAUFF Size	Thread Size d	Nominal Size DN	Dimensions (mm/in) LW	L	l	b	B	H	h	m	S	V	SW	K	i	H2	Nom. Pressure (bar/PSI)	Weight (kg/lbs)	Order Codes (Standard Option)
02	G 1/8 BSP	4	5	69	40	13	29	47	33	13,5	34,5	11	9	115	10	82	500	0,40	CBVST-3-G02-0081-M
			.20	2.72	1.57	.51	1.14	1.85	1.30	.53	1.36	.43	.35	4.53	.39	3.23	7250	.88	
04	G 1/4 BSP	6	6	69	40	13	29	47	33	13,5	34,5	11	9	115	14	82	500	0,46	CBVST-3-G04-0081-M
			.24	2.72	1.57	.51	1.14	1.85	1.30	.53	1.36	.43	.35	4.53	.55	3.23	7250	1.01	
06	G 3/8 BSP	10	10	72	43	16	35	52	38	17,5	36	11	9	115	14	87	500	0,60	CBVST-3-G06-0081-M
			.39	2.83	1.69	.63	1.38	2.05	1.50	.69	1.42	.43	.35	4.53	.55	3.42	7250	1.32	
08	G 1/2 BSP	13	13	83	48	17,5	38	54	40	19	41,5	11	9	115	16,3	89	315	0,70	CBVST-3-G08-0081-M
			.51	3.27	1.89	.69	1.50	2.13	1.57	.75	1.63	.43	.35	4.53	.64	3.50	4500	1.54	
12	G 3/4BSP	20	20	95	62	24,5	52	75	57	24,5	47,5	14	14	170	18	126	315	1,80	CBVST-3-G12-0081-M
			.79	3.74	2.44	.96	2.05	2.95	2.24	.96	1.87	.55	.55	6.69	.71	4.96	4500	3.96	
16	G 1 BSP	25	25	113	66	29	61	83	65	29,5	56,5	14	14	170	20	134	315	2,40	CBVST-3-G16-0081-M
			.98	4.45	2.60	1.14	2.40	3.27	2.56	1.16	2.22	.55	.55	6.69	.79	5.73	4500	5.28	
20	G 1-1/4 BSP	32	30	111	81	39		106	84,5	39	55	16,5	17	320	22	170	350	3,80	CBVST-3-G20-0081-M
			1.18	4.37	3.19	1.54		4.17	3.33	1.54	2.17	.65	.67	12.60	.87	6.69	5000	8.36	
24	G 1-1/2 BSP	40	38	130	104	53		127	106	53	65	16,5	17	320	24	191	350	6,20	CBVST-3-G24-0081-M
			1.50	5.12	4.09	2.09		5.00	4.17	2.09	2.56	.65	.67	12.60	.94	7.52	5000	13.64	
32	G 2 BSP	50	48	150	118	58	116	137	116	58	75	16,5	17	320	26	201	350	7,80	CBVST-3-G32-0081-M
			1.89	5.91	4.65	2.28	4.57	5.39	4.57	2.28	2.95	.65	.67	12.60	1.02	7.91	5000	17.16	

Please note the pressure ratings of the tube connections.
Dimensions and design for stainless steel may vary.

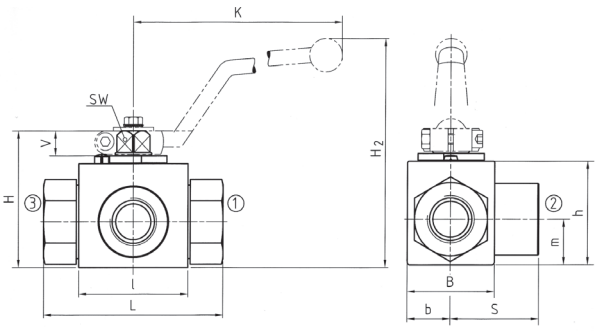

High-Pressure Block Body Ball Valve ▪ Type CBVST-3
T-Bore Three-Way Selector ▪ Female NPT Thread (ANSI B1.20.1)

Female NPT Thread (ANSI B1.20.1)

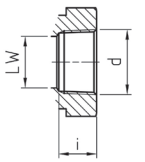

When ordering the standard option as indicated in the table below, the following materials will be supplied:

- Body, ball and stem: Carbon Steel
- Lever: Zinc (STAUFF Sizes 02 to 08)
  Carbon Steel (STAUFF Sizes 12 to 32)
- Ball seat: Delrin® (POM) Frontside Sealing
- O-rings: FKM (Viton®)

From DN32, STAUFF size 20 made from one block

Pressure Inlet possible from all Ports

STAUFF Size	Thread Size d	Nominal Size DN	Dimensions (mm/in) LW	L	l	b	B	H	h	K	S	V	SW	K	i	H2	Nom. Pressure (bar/PSI)	Weight (kg/lbs)	Order Codes (Standard Option)
02	1/8 NPT	4	5	69	40	13	29	47	33	13,5	34,5	11	9	115	10,5	82	500	0,40	CBVST-3-N02-0081-M
			.20	2.72	1.57	.51	1.14	1.85	1.30	.53	1.36	.43	.35	4.53	.41	3.23	7250	.88	
04	1/4 NPT	6	6	69	40	13	29	47	33	13,5	34,5	11	9	115	13,7	82	500	0,46	CBVST-3-N04-0081-M
			.24	2.72	1.57	.51	1.14	1.85	1.30	.53	1.36	.43	.35	4.53	.54	3.23	7250	1.01	
06	3/8 NPT	10	10	72	43	16	35	52	38	17,5	36	11	9	115	13,5	87	500	0,60	CBVST-3-N06-0081-M
			.39	2.83	1.69	.63	1.38	2.05	1.50	.69	1.42	.43	.35	4.53	.53	3.42	7250	1.32	
08	1/2 NPT	13	13	83	48	17,5	38	54	40	19	41,5	11	9	115	17	89	315	0,70	CBVST-3-N08-0081-M
			.51	3.27	1.89	.69	1.50	2.13	1.57	.75	1.63	.43	.35	4.53	.67	3.50	4500	1.54	
12	3/4NPT	20	20	95	62	24,5	52	75	57	24,5	47,5	14	14	170	18,3	126	315	1,80	CBVST-3-N12-0081-M
			.79	3.74	2.44	.96	2.05	2.95	2.24	.96	1.87	.55	.55	6.69	.72	4.96	4500	3.96	
16	1 NPT	25	25	113	66	29	61	83	65	29,5	56,5	14	14	170	21,6	134	315	2,40	CBVST-3-N16-0081-M
			.98	4.45	2.60	1.14	2.40	3.27	2.56	1.16	2.22	.55	.55	6.69	.85	5.73	4500	5.28	
20	1-1/4 NPT	32	30	120	81	39		106	84,5	39	55	16,5	17	320	22,1	170	350	3,80	CBVST-3-N20-0081-M
			1.18	4.72	3.19	1.54		4.17	3.33	1.54	2.17	.65	.67	12.60	.87	6.69	5000	8.36	
24	1-1/2 NPT	40	38	140	104	53		127	106	53	65	16,5	17	320	22,1	191	350	6,20	CBVST-3-N24-0081-M
			1.50	5.51	4.09	2.09		5.00	4.17	2.09	2.56	.65	.67	12.60	.87	7.52	5000	13.64	
32	2 NPT	50	48	150	118	58	116	137	116	58	75	16,5	17	320	30,2	201	350	7,80	CBVST-3-N32-0081-M
			1.89	5.91	4.65	2.28	4.57	5.39	4.57	2.28	2.95	.65	.67	12.60	1.19	7.91	5000	17.16	

Please note the pressure ratings of the tube connections.
Dimensions and design for stainless steel may vary.

B

High-Pressure Block Body Ball Valve ▪ Type CBVST-3
T-Bore Three-Way Selector ▪ Female UN/UNF Thread (SAE J 514)

When ordering the standard option as indicated in the table below, the following materials will be supplied:

- Body, ball and stem: Carbon Steel
- Lever: Zinc (STAUFF Sizes 04 to 08)
  Carbon Steel (STAUFF Sizes 12 to 32)
- Ball seat: Delrin® (POM) Frontside Sealing
- O-rings: FKM (Viton®)

From DN32, STAUFF size 20 made from one block

Female UN/UNF Thread (SAE J 514)

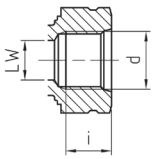

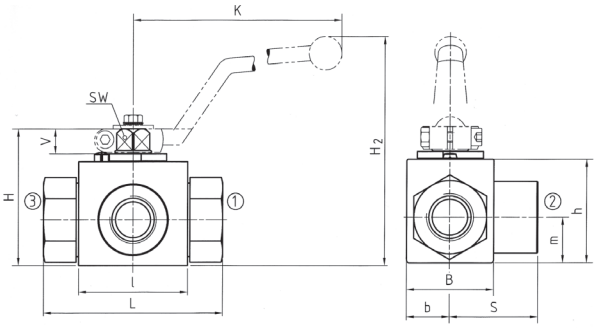

Pressure Inlet possible from all Ports

STAUFF Size	Thread Size d	Nominal Size DN	Dimensions (mm/in) LW	L	l	b	B	H	h	K	S	V	SW	K	i	H2	Nom. Pressure (bar/PSI)	Weight (kg/lbs)	Order Codes (Standard Option)
04	7/16–20 UNF	6	5	69	40	13	29	47	33	13,5	34,5	11	9	115	12	82	500	0,46	CBVST-3-U04-0081-M
	(1/4" SAE)		.20	2.72	1.57	.51	1.14	1.85	1.30	.53	1.36	.43	.35	4.53	.47	3.23	7250	1.01	
06	9/16–18 UNF	10	10	72	43	16	35	52	38	17,5	36	11	9	115	13	87	500	0,60	CBVST-3-U06-0081-M
	(3/8" SAE)		.39	2.83	1.69	.63	1.38	2.05	1.50	.69	1.42	.43	.35	4.53	.51	3.42	7250	1.32	
08	3/4–16 UNF	13	13	83	48	17,5	38	54	40	19	41,5	11	9	115	15	89	315	0,70	CBVST-3-U08-0081-M
	(1/2" SAE)		.51	3.27	1.89	.69	1.50	2.13	1.57	.75	1.63	.43	.35	4.53	.59	3.50	4500	1.54	
12	1-1/16–12 UN	20	20	95	62	24,5	52	75	57	24,5	47,5	14	14	170	20	126	315	1,80	CBVST-3-U12-0081-M
	(3/4" SAE)		.79	3.74	2.44	.96	2.05	2.95	2.24	.96	1.87	.55	.55	6.69	.79	4.96	4500	3.96	
16	1-5/16–12 UN	25	25	113	66	29	61	83	65	29,5	56,5	14	14	170	20	134	315	2,40	CBVST-3-U16-0081-M
	(1" SAE)		.98	4.45	2.60	1.14	2.40	3.27	2.56	1.16	2.22	.55	.55	6.69	.79	5.73	4500	5.28	
20	1-5/8–12 UN	32	30	111	81	39		106	84,5	39	55	16,5	17	320	20	170	350	3,80	CBVST-3-U20-0081-M
	(1-1/4" SAE)		1.18	4.37	3.19	1.54		4.17	3.33	1.54	2.17	.65	.67	12.60	.79	6.69	5000	8.36	
24	1-7/8–12 UN	40	38	130	104	53		127	106	53	65	16,5	17	320	20	191	350	6,20	CBVST-3-U24-0081-M
	(1-1/2" SAE)		1.50	5.12	4.09	2.09		5.00	4.17	2.09	2.56	.65	.67	12.60	.79	7.52	5000	13.64	
32	2-1/2–12 UN	50	48	150	118	58	116	137	116	58	75	16,5	17	320	20	201	350	7,80	CBVST-3-U32-0081-M
	(2" SAE)		1.89	5.91	4.65	2.28	4.57	5.39	4.57	2.28	2.95	.65	.67	12.60	.79	7.91	5000	17.16	

Please note the pressure ratings of the tube connections.
Dimensions and design for stainless steel may vary.

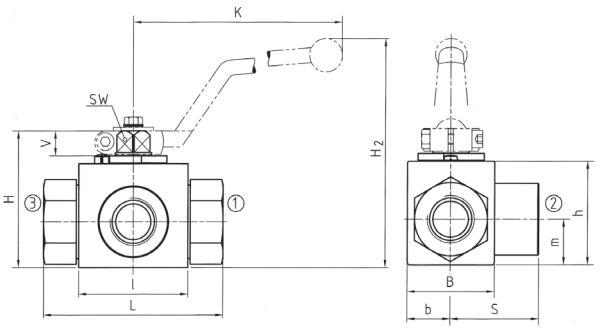

High-Pressure Block Body Ball Valve ▪ Type CBVST-3
T-Bore Three-Way Selector ▪ 24° Cone Connection
Light Series (DIN 2353 / ISO 8434-1)

24° Cone Connection (DIN 2353 / ISO 8434-1)

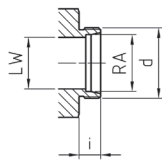

When ordering the standard option as indicated in the table below, the following materials will be supplied:

- Body, ball and stem: Carbon Steel
- Lever: Zinc (STAUFF Sizes 02 to 08)
  Carbon Steel (STAUFF Sizes 12 to 20R)
- Ball seat: Delrin® (POM) Frontside Sealing
- O-rings: FKM (Viton®)

Union nuts and cutting rings are not included in delivery.

Pressure Inlet possible from all Ports

STAUFF Size	Tube/Thread Size d	Nominal Size DN	Dimensions (mm/in) RA	LW	L	l	b	B	H	h	m	S	V	SW	K	i	H2	Nom. Pressure (bar/PSI)	Weight (kg/lbs)	Order Codes (Standard Option)
02	06L / M12 x 1,5	4	6	5	67	40	13	29	47	33	13,5	33,5	11	9	115	10	82	500	0,30	CBVST-3-06L-0081-M
			.24	.20	2.64	1.57	.51	1.14	1.85	1.30	.53	1.32	.43	.35	4.53	.39	3.23	7250	.66	
04	08L / M14 x 1,5	6	8	6	67	40	13	29	47	33	13,5	33,5	11	9	115	10	82	500	0,40	CBVST-3-08L-0081-M
			.31	.24	2.64	1.57	.51	1.14	1.85	1.30	.53	1.32	.43	.35	4.53	.39	3.23	7250	.88	
05	10L / M16 x 1,5	8	10	6	74	40	13	29	47	33	13,5	34,5	11	9	115	11	82	500	0,40	CBVST-3-10L-0081-M
			.39	.24	2.91	1.57	.51	1.14	1.85	1.30	.53	1.36	.43	.35	4.53	.43	3.23	7250	.88	
06	12L / M18 x 1,5	10	12	10	74	43	16	35	52	38	17,5	36,5	11	9	115	11	87	500	0,50	CBVST-3-12L-0081-M
			.47	.39	2.91	1.69	.63	1.38	2.05	1.50	.69	1.44	.43	.35	4.53	.43	3.42	7250	1.10	
08	15L / M22 x 1,5	13	15	13	82	48	17,5	38	54	40	19	41,5	11	9	115	12	89	315	0,65	CBVST-3-15L-0081-M
			.59	.51	3.23	1.89	.69	1.50	2.13	1.57	.75	1.63	.43	.35	4.53	.47	3.50	4500	1.43	
08	18L / M26 x 1,5	13	18	13	82	48	17,5	38	54	40	19	41,5	11	9	115	12	89	315	0,69	CBVST-3-18L-0081-M
			.71	.51	2.23	1.89	.69	1.50	2.13	1.57	.75	1.63	.43	.35	4.53	.47	3.50	4500	1.52	
12	22L / M30 x 2	20	22	20	101	62	24,5	52	75	57	24,5	48	14	14	170	14	126	315	1,50	CBVST-3-22L-0081-M
			.87	.79	3.98	2.44	.96	2.05	2.95	2.24	.96	1.89	.55	.55	6.69	.55	4.96	4500	3.30	
16	28L / M36 x 2	25	28	25	108	66	29	61	83	65	29,5	54	14	14	170	14	134	315	2,10	CBVST-3-28L-0081-M
			1.10	.98	4.25	2.60	1.14	2.40	3.27	2.56	1.16	2.13	.55	.55	6.69	.55	5.73	4500	4.62	
20R	35L / M45 x 2	25/32	35	25	112	66	29	61	83	65	29,5	56	14	14	170	16	134	315	2,50	CBVST-3-35LDN25-0081-M
			1.38	.98	4.41	2.60	1.14	2.40	3.27	2.56	1.16	2.20	.55	.55	6.69	.63	5.73	4500	5.50	

Please note the pressure ratings of the tube connections.
Dimensions and design for stainless steel may vary.

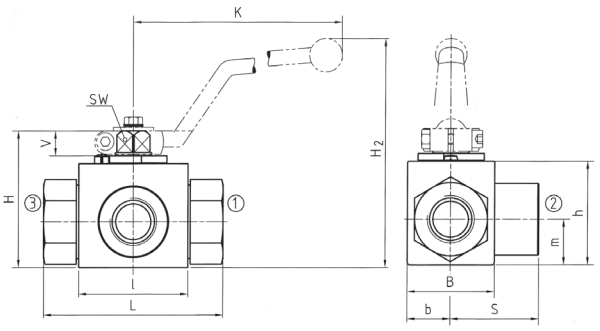

High-Pressure Block Body Ball Valve ▪ Type CBVST-3
T-Bore Three-Way Selector ▪ 24° Cone Connection
Heavy Series (DIN 2353 / ISO 8434-1)

24° Cone Connection (DIN 2353 / ISO 8434-1)

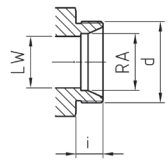

When ordering the standard option as indicated in the table below, the following materials will be supplied:

- Body, ball and stem: Carbon Steel
- Lever: Zinc (STAUFF Sizes 02 to 08)
  Carbon Steel (STAUFF Sizes 12 to 20R)
- Ball seat: Delrin® (POM) Frontside Sealing
- O-rings: FKM (Viton®)

Union nuts and cutting rings are not included in delivery.

Pressure Inlet possible from all Ports

STAUFF Size	Tube/Thread Size d	Nominal Size DN	Dimensions (mm/in) RA	LW	L	l	b	B	H	h	m	S	V	SW	K	i	H2	Nom. Pressure (bar/PSI)	Weight (kg/lbs)	Order Codes (Standard Option)
02	08S / M16 x 1,5	4	8	5	73	40	13	29	47	33	13,5	34,5	11	9	115	12	82	500	0,42	CBVST-3-08S-0081-M
			.31	.20	2.87	1.57	.51	1.14	1.85	1.30	.53	1.36	.43	.35	4.53	.47	3.23	7250	.92	
04	10S / M18 x 1,5	6	10	6	73	40	13	29	47	33	13,5	34,5	11	9	115	12	82	500	0,43	CBVST-3-10S-0081-M
			.39	.24	2.87	1.57	.51	1.14	1.85	1.30	.53	1.36	.43	.35	4.53	.47	3.23	7250	.95	
05	12S / M20 x 1,5	8	12	6	76	40	13	29	47	33	13,5	34,5	11	9	115	12	82	500	0,44	CBVST-3-10S-0081-M
			.47	.24	2.99	1.57	.51	1.14	1.85	1.30	.53	1.36	.43	.35	4.53	.47	3.23	7250	.97	
06	14S / M22 x 1,5	10	14	10	80	43	16	35	52	38	17,5	36,5	11	9	115	14	87	500	0,50	CBVST-3-14S-0081-M
			.55	.39	3.15	1.69	.63	1.38	2.05	1.50	.69	1.43	.43	.35	4.53	.55	3.42	7250	1.10	
08	16S / M24 x 1,5	13	16	13	86	48	17,5	38	54	40	19	43	11	9	115	14	89	315	0,65	CBVST-3-16S-0081-M
			.63	.51	3.39	1.89	.69	1.50	2.13	1.57	.75	1.69	.43	.35	4.53	.55	3.50	4500	1.43	
08	20S / M30 x 2	13	20	13	90	48	17,5	38	54	40	19	43	11	9	115	16	89	315	0,70	CBVST-3-20SDN13-0081-M
			.79	.51	3.54	1.89	.69	1.50	2.13	1.57	.75	1.69	.43	.35	4.53	.63	3.50	4500	1.54	
12	25S / M36 x 2	20	25	20	109	62	24,5	52	75	57	24,5	48	14	14	170	18	126	315	1,70	CBVST-3-25S-0081-M
			.98	.79	4.29	2.44	.96	2.05	2.95	2.24	.96	1.89	.55	.55	6.69	.71	4.96	4500	3.74	
16	30S / M42 x 2	25	30	25	120	66	29	61	83	65	29,5	57,5	14	14	170	20	134	315	2,40	CBVST-3-30S-0081-M
			1.18	.98	4.72	2.60	1.14	2.40	3.27	2.56	1.16	2.26	.55	.55	6.69	.79	5.73	4500	5.28	
20R	38S / M52 x 2	25/32	38	25	124	66	29	61	83	65	29,5	57,5	14	14	170	22	134	315	2,80	CBVST-3-38SDN25-0081-M
			1.50	.98	4.88	2.60	1.14	2.40	3.27	2.56	1.16	2.26	.55	.55	6.69	.87	5.73	4500	6.16	

Please note the pressure ratings of the tube connections.
Dimensions and design for stainless steel may vary.

B

High-Pressure Block Body Ball Valve ▪ Type LBV-3

Pressure inlet possible from all ports!

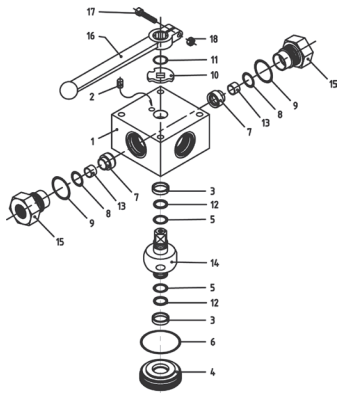

List of Components

No.	Qty.	Description
1	1	Body
2	1	Stop Pin
3*	2	Bearing
4	1	Trunnion Retainer
5*	2	Trunnion O-Ring
6*	1	Retainer O-Ring
7*	3	Ball Seat
8*	3	Seat O-Ring
9*	3	Connector O-Ring
10	1	Cam Plate
11	1	Snap Ring
12*	2	Trunnion Back Up Ring
13	3	Seat Support
14	1	Trunnion Ball
15	3	Connector
16	1	Handle
17	1	Handle Bolt

Characteristics

Three-way high-pressure block body ball valves designed for use as three-way selectors (L-bore, 90° operation) for hydraulic applications

Standard Construction
- Block body design for in-line assembly
- Multi-way valve with trunnion-style ball
- Supplied with lever

Standard Materials
- Body: Carbon Steel, zinc/iron-plated
- Ball: Carbon Steel, hard chrome-plated
- Stem: Carbon Steel
- Lever: Aluminium (STAUFF Sizes 02 and 04)
  Carbon Steel (STAUFF Sizes 06 to 24R)
- Ball seat: Delrin® (POM)
- O-rings: FKM (Viton®)

Standard Connections Styles / Sizes
- Female BSP thread (DIN ISO 228) >G 1-1/2 BSP
- Female NPT thread (ANSI B1.20.1) >1-1/2 NPT
- Female UN/UNF thread (SAE J 514) >1-5/16–12 UN (1" SAE)
- 24° Cone Connection (DIN 2353 / ISO 8434-1) >35L
- 24° Cone Connection (DIN 2353 / ISO 8434-1) >38S

Pressure loaded seats at all ports!

Pressure Range
- Pressure range: up to 500 bar / 7250 PSI (depending on size and material combination of the ball valve)

Temperature Range
- Operating temperature range:
  -20 °C ... +100 °C / -4 °F ... + 212 °F

Options / Accessories
- Alternative lever designs/materials (see page 114)
- Locking devices (see pages 115-117)
- Actuator packages (see page 118)
- Limit switches (see page 118)
- Stainless Steel body
- Stainless Steel ball and stem
- Special ball seat and O-ring materials available for lower/higher temperatures and more aggressive media
- Seal kits (including items marked by * in the above list)

Porting Pattern
- Symbol : L
- Overlap: positive
- Operating: 90°

P01

- Stop of end position:

Please see pages 120-121 for alternative porting patterns.

Order Codes

LBV - 3 - G 02 - 0 0 0 1 - M - -

① ② ③ ④ ⑤ ⑥ ⑦ ⑧ ⑨ ⑩ ⑪

① Type

Multi-Way L-Bore Ball Valve	**LBV**

② Number of Ports

Three Ports (Three-Way Ball Valve)	**3**

③ Connection Style

Female BSP Thread (DIN ISO 228)	**G**
Female NPT Thread (ANSI B1.20.1)	**N**
Female UN/UNF Thread (SAE J 514)	**U**
24° Cone Connection (Light / Heavy Series)	**—**

Please contact STAUFF for alternative connection styles.

④ Connection Size

STAUFF Size (according to dimension table) for connection styles G, N and U:

02	**04**	**06**	**08**	**10**	**12**	**16**	**20R**	**24R**

Tube Size (according to dimension table) for 24° Cone Connection (Light Series):

06L	**08L**	**10L**	**12L**	**15L**	**18L**	**22L**	**28L**	**35L**

Tube Size (according to dimension table) for 24° Cone Connection (Heavy Series):

08S	**10S**	**12S**	**14S**	**16S**	**20S**	**25S**	**30S**	**38S**

Please contact STAUFF for alternative connection sizes.

⑤ Body Material / Surface Finishing

Carbon Steel, zinc/iron-plated	**0**
Stainless Steel V4A (AISI 316Ti)	**1**

Note: Stainless steel version may vary in dimensions and design.
Alternative materials / surface finishings are available upon request. Contact STAUFF for further information.

⑥ Ball / Stem Material

Ball: Carbon Steel, hard chrome-plated Stem: Carbon Steel	**0**
Ball / Stem: Stainless Steel V4A (AISI 316Ti)	**1**

Alternative materials / surface finishings are available upon request. Contact STAUFF for further information.

⑦ Ball Seat Material

Delrin® (POM)	**0**

Alternative materials are available upon request. Contact STAUFF for further information.

⑧ O-Ring Material

NBR (Buna-N®)	**0**
FKM (Viton®)	**1**
EPDM	**3**

Alternative materials are available upon request. Contact STAUFF for further information.

⑨ Manufacturing Code

Manufacturing code for all connection styles	**M**

⑩ Lever Options

Supplied with standard lever (according to table)	**—**
Supplied without lever	**0**

Alternative levers can be ordered separately. Please see page 114 for further information.

⑪ Accessories / Options

Supplied without accessories	**—**
Supplied with Locking Device LD4	**LD4**

Please see page 115-119 for further information and options.

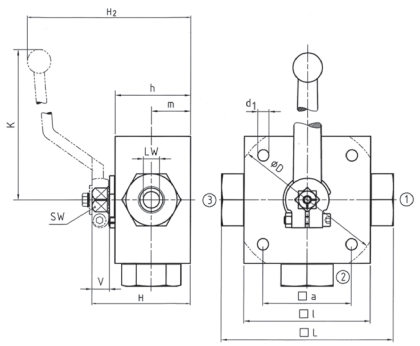

High-Pressure Block Body Ball Valve ▪ Type LBV-3
L-Bore Three-Way Selector ▪ Female BSP Thread (DIN ISO 228)

Female BSP Thread (DIN ISO 228)

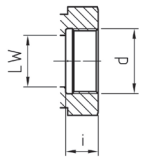

When ordering the standard option as indicated in the table below, the following materials will be supplied:

- Body, ball and stem: Carbon Steel
- Lever: Aluminium (STAUFF Sizes 02 and 04)
  Carbon Steel (STAUFF Sizes 06 to 24R)
- Ball seat: Delrin® (POM)
- O-rings: FKM (Viton®)

B

STAUFF Size	Thread Size d	Nominal Size DN	Dimensions (mm/in) LW	L	D	l	a	H	h	m	K	V	SW	i	d1	H2	Nom. Pressure (bar/PSI)	Weight (kg/lbs)	Order Codes (Standard Option)
02	G 1/8 BSP	4	5	100		70	55	58	40	22	160	14	12	10	6,5	101	500	1,60	LBV-3-G02-0001-M
			.20	3.94		2.76	2.17	2.28	1.57	.87	6.30	.55	.47	.39	.26	3.98	7250	3.52	
04	G 1/4 BSP	6	5	100		70	55	58	40	22	160	14	12	14	6,5	101	500	1,60	LBV-3-G04-0001-M
			.20	3.94		2.76	2.17	2.28	1.57	.87	6.30	.55	.47	.55	.26	3.98	7250	3.52	
06	G 3/8 BSP	10	8	115		80	65	68	50	27	171	14	14	14	6,5	119	500	2,70	LBV-3-G06-0001-M
			.31	4.53		3.15	2.56	2.68	1.97	1.06	6.73	.55	.55	.55	.26	4.69	7250	5.94	
08	G 1/2 BSP	13	13	136		100	80	78	60	31	171	14	14	16,3	9	129	400	4,90	LBV-3-G08-0001-M
			.51	5.35		3.94	3.15	3.07	2.36	1.22	6.73	.55	.55	.64	.35	5.08	5800	10.78	
10	G 5/8 BSP	16	13	139		100	80	78	60	31	171	14	14	18	9	129	400	4,90	LBV-3-G10-0001-M
			.51	5.47		3.94	3.15	3.07	2.36	1.22	6.73	.55	.55	.71	.35	5.08	5800	10.78	
12	G 3/4 BSP	20	18	154	138	113	85	88	67	36,5	306	16,5	17	18	8,5	159	315	6,70	LBV-3-G12-0001-M
			.71	6.06	5.43	4.45	3.35	3.46	2.64	1.44	12.05	.65	.67	.71	.33	6.26	4500	14.74	
16	G 1 BSP	25	23	172	138	119	85	103	82	47,5	306	16,5	17	20	8,5	174	315	8,30	LBV-3-G16-0001-M
			.91	6.77	5.43	4.69	3.35	4.06	3.23	1.87	12.05	.65	.67	.79	.33	6.85	4500	18.26	
20R	G 1-1/4 BSP	25/32	23	180	138	119	85	103	82	47,5	306	16,5	17	22	8,5	174	315	8,50	LBV-3-G20R-0001-M
			.91	7.09	5.43	4.69	3.35	4.06	3.23	1.87	12.05	.65	.67	.87	.33	6.85	4500	18.70	
24R	G 1-1/2 BSP	25/40	23	180	138	119	85	103	82	47,5	306	16,5	17	24	8,5	174	250	8,50	LBV-3-G24R-0001-M
			.91	7.09	5.43	4.69	3.35	4.06	3.23	1.87	12.05	.65	.67	.94	.33	6.85	3600	18.70	

Please note the pressure ratings of the tube connections.
Dimensions and design for stainless steel may vary.

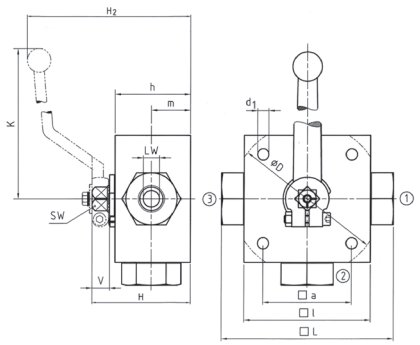

High-Pressure Block Body Ball Valve ▪ Type LBV-3
L-Bore Three-Way Selector ▪ Female NPT Thread (ANSI B1.20.1)

Female NPT Thread (ANSI B1.20.1)

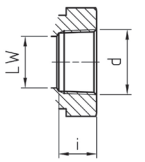

When ordering the standard option as indicated in the table below, the following materials will be supplied:

- Body, ball and stem: Carbon Steel
- Lever: Aluminium (STAUFF Sizes 02 and 04)
  Carbon Steel (STAUFF Sizes 06 to 24R)
- Ball seat: Delrin® (POM)
- O-rings: FKM (Viton®)

STAUFF Size	Thread Size d	Nominal Size DN	Dimensions (mm/in) LW	L	D	l	a	H	h	m	K	V	SW	i	d1	H2	Nom. Pressure (bar/PSI)	Weight (kg/lbs)	Order Codes (Standard Option)
02	1/8 NPT	4	5	100		70	55	58	40	22	160	14	12	10,5	6,5	101	500	1,60	LBV-3-N02-0001-M
			.20	3.94		2.76	2.17	2.28	1.57	.87	6.30	.55	.47	.41	.26	3.98	7250	3.52	
04	1/4 NPT	6	5	100		70	55	58	40	22	160	14	12	13,7	6,5	101	500	1,60	LBV-3-N04-0001-M
			.20	3.94		2.76	2.17	2.28	1.57	.87	6.30	.55	.47	.54	.26	3.98	7250	3.52	
06	3/8 NPT	10	8	115		80	65	68	50	27	171	14	14	13,5	6,5	119	500	2,80	LBV-3-N06-0001-M
			.31	4.53		3.15	2.56	2.68	1.97	1.06	6.73	.55	.55	.53	.26	4.69	7250	6.16	
08	1/2 NPT	13	13	136		100	80	78	60	31	171	14	14	17	9	129	400	5,20	LBV-3-N08-0001-M
			.51	5.35		3.94	3.15	3.07	2.36	1.22	6.73	.55	.55	.67	.35	5.08	5800	11.44	
12	3/4NPT	20	18	154	138	113	85	88	67	36,5	306	16,5	17	18,3	8,5	159	315	6,80	LBV-3-N12-0001-M
			.71	6.06	5.43	4.45	3.35	3.46	2.64	1.44	12.05	.65	.67	.72	.33	6.26	4500	14.96	
16	1 NPT	25	23	172	138	119	85	103	82	47,5	306	16,5	17	21,6	8,5	174	315	8,50	LBV-3-N16-0001-M
			.91	6.77	5.43	4.69	3.35	4.06	3.23	1.87	12.05	.65	.67	.85	.33	6.85	4500	18.70	
20R	1-1/4 NPT	25/32	23	180	138	119	85	103	82	47,5	306	16,5	17	22,1	8,5	174	315	8,80	LBV-3-N20R-0001-M
			.91	7.09	5.43	4.69	3.35	4.06	3.23	1.87	12.05	.65	.67	.87	.33	6.85	4500	19.36	
24R	1-1/2 NPT	25/40	23	180	138	119	85	103	82	47,5	306	16,5	17	22,1	8,5	174	250	8,80	LBV-3-N24R-0001-M
			.91	7.09	5.43	4.69	3.35	4.06	3.23	1.87	12.05	.65	.67	.87	.33	6.85	3600	19.36	

Please note the pressure ratings of the tube connections.
Dimensions and design for stainless steel may vary.

High-Pressure Block Body Ball Valve ▪ Type LBV-3
L-Bore Three-Way Selector ▪ Female UN/UNF Thread (SAE J 514)

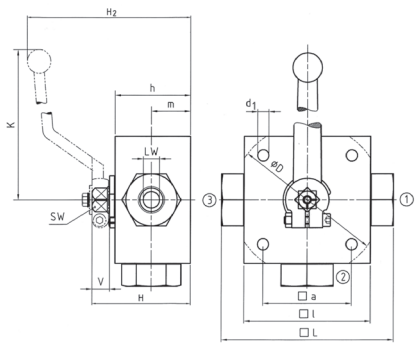

When ordering the standard option as indicated in the table below, the following materials will be supplied:

- Body, ball and stem: Carbon Steel
- Lever: Aluminium (STAUFF Size 04)
  Carbon Steel (STAUFF Sizes 06 and 24R)
- Ball seat: Delrin® (POM)
- O-rings: FKM (Viton®)

Female UN/UNF Thread (SAE J 514)

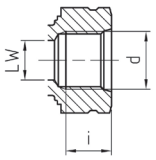

STAUFF Size	Thread Size d	Nominal Size DN	Dimensions (mm/in) LW	L	D	l	a	H	h	m	K	V	SW	i	d1	H2	Nom. Pressure (bar/PSI)	Weight (kg/lbs)	Order Codes (Standard Option)
04	7/16–20 UNF	6	5	100		70	55	58	40	22	160	14	12	14	6,5	101	500	1,60	LBV-3-U04-0001-M
	(1/4" SAE)		.20	3.94		2.76	2.17	2.28	1.57	.87	6.30	.55	.47	.55	.26	3.98	7250	3.52	
06	9/16–18 UNF	10	8	115		80	65	68	50	27	171	14	14	14	6,5	119	500	2,80	LBV-3-U06-0001-M
	(3/4" SAE)		.31	4.53		3.15	2.56	2.68	1.97	1.06	6.73	.55	.55	.55	.26	4.69	7250	6.16	
08	3/4–16 UNF	13	13	144		100	80	78	60	31	171	14	14	16,3	9	129	400	5,20	LBV-3-U08-0001-M
	(1/2" SAE)		.51	5.67		3.94	3.15	3.07	2.36	1.22	6.73	.55	.55	.64	.35	5.08	5800	11.44	
12	1-1/16–12 UN	20	18	164	138	113	85	88	67	36,5	306	16,5	17	18	8,5	159	315	6,80	LBV-3-U12-0001-M
	(3/4" SAE)		.71	6.46	5.43	4.45	3.35	3.46	2.64	1.44	12.05	.65	.67	.71	.33	6.26	4500	14.96	
16	1-5/16–12 UN	25	23	180	138	119	85	103	82	47,5	306	16,5	17	20	8,5	174	315	8,50	LBV-3-U16-0001-M
	(1" SAE)		.91	7.09	5.43	4.69	3.35	4.06	3.23	1.87	12.05	.65	.67	.79	.33	6.85	4500	18.70	

Please note the pressure ratings of the tube connections.
Dimensions and design for stainless steel may vary.

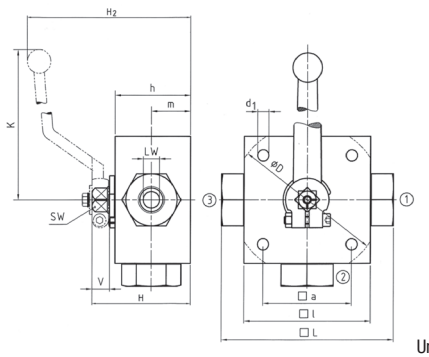

Union nuts and cutting rings are not included in delivery.

High-Pressure Block Body Ball Valve ▪ Type LBV-3
L-Bore Three-Way Selector ▪ 24° Cone Connection
Light Series (DIN 2353 / ISO 8434-1)

24° Cone Connection (DIN 2353 / ISO 8434-1)

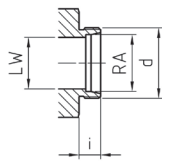

When ordering the standard option as indicated in the table below, the following materials will be supplied:

- Body, ball and stem: Carbon Steel
- Lever: Aluminium (STAUFF Sizes 02 and 04)
  Carbon Steel (STAUFF Sizes 05 to 20R)
- Ball seat: Delrin® (POM)
- O-rings: FKM (Viton®)

STAUFF Size	Tube/Thread Size d	Nominal Size DN	Dimensions (mm/in) RA	LW	L	D	l	a	H	h	m	K	V	SW	i	d1	H2	Nom. Pressure (bar/PSI)	Weight (kg/lbs)	Order Codes (Standard Option)
02	06L / M12 x 1,5	4	6	5	105		70	55	58	40	22	160	14	12	10	6,5	101	500	1,60	LBV-3-06L-0001-M
			.24	.20	4.13		2.76	2.17	2.28	1.57	.87	6.30	.55	.47	.39	.26	3.98	7250	3.52	
04	08L / M14 x 1,5	6	8	5	105		70	55	58	40	22	160	14	12	10	6,5	101	500	1,80	LBV-3-08L-0001-M
			.31	.20	4.13		2.76	2.17	2.28	1.57	.87	6.30	.55	.47	.39	.26	3.98	7250	3.96	
05	10L / M16 x 1,5	8	10	8	114		80	65	68	50	27	171	14	14	11	6,5	119	500	2,60	LBV-3-10L-0001-M
			.39	.31	4.49		3.15	2.56	2.68	1.97	1.06	6.73	.55	.55	.43	.26	4.69	7250	5.72	
06	12L / M18 x 1,5	10	12	8	114		80	65	68	50	27	171	14	14	11	6,5	119	500	2,60	LBV-3-12L-0001-M
			.47	.31	4.49		3.15	2.56	2.68	1.97	1.06	6.73	.55	.55	.43	.26	4.69	7250	5.72	
08	15L / M22 x 1,5	13	15	13	137		100	80	78	60	31	171	14	14	12	9	129	400	4,70	LBV-3-15L-0001-M
			.59	.51	5.39		3.94	3.15	3.07	2.36	1.22	6.73	.55	.55	.47	.35	5.08	5800	10.34	
10	18L / M26 x 1,5	16	18	18	137		113	85	88	67	36,5	171	16,5	17	12	8,5	129	400	4,70	LBV-3-18LDN16-0001-M
			.71	.71	5.39		4.45	3.35	3.46	2.64	1.44	6.73	.65	.67	.47	.33	5.08	5800	10.34	
12	22L / M30 x 2	20	22	23	152	138	119	85	103	82	47,5	306	16,5	17	14	8,5	159	315	6,60	LBV-3-22L-0001-M
			.87	.91	5.98	5.43	4.69	3.35	4.06	3.23	1.87	12.05	.65	.67	.55	.33	6.26	4500	14.52	
16	28L / M36 x 2	25	28	23	166	138	119	85	103	82	47,5	306	16,5	17	14	8,5	174	315	8,00	LBV-3-28L-0001-M
			1.10	.91	6.54	5.43	4.69	3.35	4.06	3.23	1.87	12.05	.65	.67	.55	.33	6.85	4500	17.60	
20R	35L / M45 x 2	25/32	35	23	170	138	119	85	103	82	47,5	306	16,5	17	16	8,5	174	315	8,12	LBV-3-35LDN25-0001-M
			1.38	.91	6.69	5.43	4.69	3.35	4.06	3.23	1.87	12.05	.65	.67	.63	.33	6.85	4500	17.86	

Please note the pressure ratings of the tube connections.
Dimensions and design for stainless steel may vary.

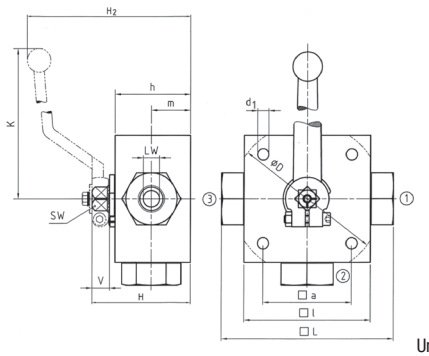

Union nuts and cutting rings are not included in delivery.

High-Pressure Block Body Ball Valve ▪ Type LBV-3
L-Bore Three-Way Selector ▪ 24° Cone Connection
Heavy Series (DIN 2353 / ISO 8434-1)

24° Cone Connection (DIN 2353 / ISO 8434-1)

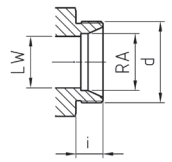

When ordering the standard option as indicated in the table below, the following materials will be supplied:

- Body, ball and stem: Carbon Steel
- Lever: Aluminium (STAUFF Sizes 02 and 04)
  Carbon Steel (STAUFF Sizes 05 to 20R)
- Ball seat: Delrin® (POM)
- O-rings: FKM (Viton®)

STAUFF Size	Tube/Thread Size d	Nominal Size DN	Dimensions (mm/in) RA	LW	L	D	l	a	H	h	m	K	V	SW	i	d1	H2	Nom. Pressure (bar/PSI)	Weight (kg/lbs)	Order Codes (Standard Option)
02	08S / M16 x 1,5	4	8	5	105		70	55	58	40	22	160	14	12	12	6,5	101	500	1,60	LBV-3-08S-0001-M
			.31	.20	4.13		2.76	2.17	2.28	1.57	.87	6.30	.55	.47	.47	.26	3.98	7250	3.52	
04	10S / M18 x 1,5	6	10	5	105		70	55	58	40	22	160	14	12	12	6,5	101	500	1,80	LBV-3-10S-0001-M
			.39	.20	4.13		2.76	2.17	2.28	1.57	.87	6.30	.55	.47	.47	.26	3.98	7250	3.96	
05	12S / M20 x 1,5	8	12	8	116		80	65	68	50	27	171	14	14	12	6,5	119	500	2,60	LBV-3-12S-0001-M
			.47	.31	4.57		3.15	2.56	2.68	1.97	1.06	6.73	.55	.55	.47	.26	4.69	7250	5.72	
06	14S / M22 x 1,5	10	14	8	120		80	65	68	50	27	171	14	14	14	6,5	119	500	2,60	LBV-3-14S-0001-M
			.55	.31	4.72		3.15	2.56	2.68	1.97	1.06	6.73	.55	.55	.55	.26	4.69	7250	5.72	
08	16S / M24 x 1,5	13	16	13	141		100	80	78	60	31	171	14	14	14	9	129	400	4,70	LBV-3-16S-0001-M
			.63	.51	5.55		3.94	3.15	3.07	2.36	1.22	6.73	.55	.55	.55	.35	5.08	5800	10.34	
10	20S / M30 x 2	16	20	18	145		113	80	88	67	36,5	171	16,5	14	16	8,5	129	400	4,70	LBV-3-20S-0001-M
			.79	.71	5.71		4.45	3.15	3.46	2.64	1.44	6.73	.65	.55	.63	.33	5.08	5800	10.34	
12	25S / M36 x 2	20	25	23	160	138	119	80	103	82	47,5	306	16,5	14	18	8,5	159	315	6,60	LBV-3-25S-0001-M
			.98	.91	6.30	5.43	4.69	3.15	4.06	3.23	1.87	12.05	.65	.55	.71	.33	6.26	4500	14.52	
16	30S / M42 x 2	25	30	23	176	138	119	80	103	82	47,5	306	16,5	14	20	8,5	174	315	8,00	LBV-3-30S-0001-M
			1.18	.91	6.93	5.43	4.69	3.15	4.06	3.23	1.87	12.05	.65	.55	.79	.33	6.85	4500	17.60	
20R	38S / M52 x 2	25/32	38	23	180	138	119	80	103	82	47,5	306	16,5	14	22	8,5	174	315	8,12	LBV-3-38SDN25-0001-M
			1.50	.91	7.09	5.43	4.69	3.15	4.06	3.23	1.87	12.05	.65	.55	.87	.33	6.85	4500	17.86	

Please note the pressure ratings of the tube connections.
Dimensions and design for stainless steel may vary.

B

High-Pressure Block Body Ball Valve ▪ Type TBV-3

Pressure inlet possible from all ports!

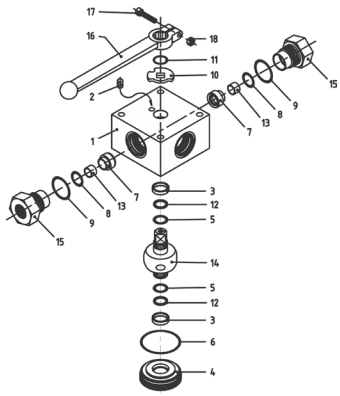

List of Components

No.	Qty.	Description
1	1	Body
2	1	Stop Pin
3*	2	Bearing
4	1	Trunnion Retainer
5*	2	Trunnion O-Ring
6*	1	Retainer O-Ring
7*	3	Ball Seat
8*	3	Seat O-Ring
9*	3	Connector O-Ring
10	1	Cam Plate
11	1	Snap Ring
12*	2	Trunnion Back Up Ring
13	3	Seat Support
14	1	Trunnion Ball
15	3	Connector
16	1	Handle
17	1	Handle Bolt

Characteristics

Three-way high-pressure block body ball valves designed for use as three-way selectors (T-bore, 90° operation) for hydraulic applications

Standard Construction
- Block body design for in-line assembly
- Multi-way valve with trunnion-style ball
- Supplied with lever

Standard Materials
- Body: Carbon Steel, zinc/iron-plated
- Ball: Carbon Steel, hard chrome-plated
- Stem: Carbon Steel
- Lever: Aluminium (STAUFF Sizes 02 and 04)
  Carbon Steel (STAUFF Sizes 06 to 24R)
- Ball seat: Delrin® (POM)
- O-rings: FKM (Viton®)

Standard Connections Styles / Sizes
- Female BSP thread (DIN ISO 228) >G 1-1/2 BSP
- Female NPT thread (ANSI B1.20.1) >1-1/2 NPT
- Female UN/UNF thread (SAE J 514) >1-5/16–12 UN (1" SAE)
- 24° Cone Connection (DIN 2353 / ISO 8434-1) >35L
- 24° Cone Connection (DIN 2353 / ISO 8434-1) >38S

Pressure loaded seats at all ports!

Pressure Range
- Pressure range: up to 500 bar / 7250 PSI (depending on size and material combination of the ball valve)

Temperature Range
- Operating temperature range:
  -20 °C ... +100 °C / -4 °F ... + 212 °F

Options / Accessories
- Alternative lever designs/materials (see page 114)
- Locking devices (see pages 115-117)
- Actuator packages (see page 118)
- Limit switches (see page 118)
- Stainless Steel body
- Stainless Steel ball and stem
- Special ball seat and O-ring materials available for lower/higher temperatures and more aggressive media
- Seal kits (including items marked by * in the above list)

Porting Pattern
- Symbol : T
- Overlap: positive
- Operating: 90°

P02

- Stop of end position:

Please see pages 120-121 for alternative porting patterns.

Order Codes

TBV - 3 - G 02 - 0 0 0 1 - M - -

① ② ③ ④ ⑤ ⑥ ⑦ ⑧ ⑨ ⑩ ⑪

① Type

Multi-Way T-Bore Ball Valve	**TBV**

② Number of Ports

Three Ports (Three-Way Ball Valve)	**3**

③ Connection Style

Female BSP Thread (DIN ISO 228)	**G**
Female NPT Thread (ANSI B1.20.1)	**N**
Female UN/UNF Thread (SAE J 514)	**U**
24° Cone Connection (Light / Heavy Series)	**—**

Please contact STAUFF for alternative connection styles.

④ Connection Size

STAUFF Size (according to dimension table) for connection styles G, N and U:

02	**04**	**06**	**08**	**10**	**12**	**16**	**20R**	**24R**

Tube Size (according to dimension table) for 24° Cone Connection (Light Series):

06L	**08L**	**10L**	**12L**	**15L**	**18L**	**22L**	**28L**	**35L**

Tube Size (according to dimension table) for 24° Cone Connection (Heavy Series):

08S	**10S**	**12S**	**14S**	**16S**	**20S**	**25S**	**30S**	**38S**

Please contact STAUFF for alternative connection sizes.

⑤ Body Material / Surface Finishing

Carbon Steel, zinc/iron-plated	**0**
Stainless Steel V4A (AISI 316Ti)	**1**

Note: Stainless steel version may vary in dimensions and design.
Alternative materials / surface finishings are available upon request. Contact STAUFF for further information.

⑥ Ball / Stem Material

Ball: Carbon Steel, hard chrome-plated Stem: Carbon Steel	**0**
Ball / Stem: Stainless Steel V4A (AISI 316Ti)	**1**

Alternative materials / surface finishings are available upon request. Contact STAUFF for further information.

⑦ Ball Seat Material

Delrin® (POM)	**0**

Alternative materials are available upon request. Contact STAUFF for further information.

⑧ O-Ring Material

NBR (Buna-N®)	**0**
FKM (Viton®)	**1**
EPDM	**3**

Alternative materials are available upon request. Contact STAUFF for further information.

⑨ Manufacturing Code

Manufacturing code for all connection styles	**M**

⑩ Lever Options

Supplied with standard lever (according to table)	**—**
Supplied without lever	**0**

Alternative levers can be ordered separately. Please see page 114 for further information.

⑪ Accessories / Options

Supplied without accessories	**—**
Supplied with Locking Device LD4	**LD4**

Please see page 115-119 for further information and options.

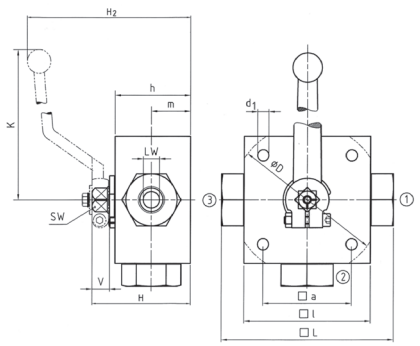

High-Pressure Block Body Ball Valve ▪ Type TBV-3
T-Bore Three-Way Selector ▪ Female BSP Thread (DIN ISO 228)

Female BSP Thread (DIN ISO 228)

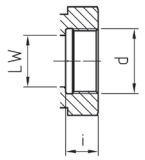

When ordering the standard option as indicated in the table below, the following materials will be supplied:

- Body, ball and stem: Carbon Steel
- Lever: Aluminium (STAUFF Sizes 02 and 04)
  Carbon Steel (STAUFF Sizes 06 to 24R)
- Ball seat: Delrin® (POM)
- O-rings: FKM (Viton®)

STAUFF Size	Thread Size d	Nominal Size DN	Dimensions (mm/in) LW	L	D	l	a	H	h	m	K	V	SW	i	d1	H2	Nom. Pressure (bar/PSI)	Weight (kg/lbs)	Order Codes (Standard Option)
02	G 1/8 BSP	4	5	100		70	55	58	40	22	160	14	12	10	6,5	101	500	1,60	TBV-3-G02-0001-M
			.20	3.94		2.76	2.17	2.28	1.57	.87	6.30	.55	.47	.39	.26	3.98	7250	3.52	
04	G 1/4 BSP	6	5	100		70	55	58	40	22	160	14	12	14	6,5	101	500	1,60	TBV-3-G04-0001-M
			.20	3.94		2.76	2.17	2.28	1.57	.87	6.30	.55	.47	.55	.26	3.98	7250	3.52	
06	G 3/8 BSP	10	8	115		80	65	68	50	27	171	14	14	14	6,5	119	500	2,70	TBV-3-G06-0001-M
			.31	4.53		3.15	2.56	2.68	1.97	1.06	6.73	.55	.55	.55	.26	4.69	7250	5.94	
08	G 1/2 BSP	13	13	136		100	80	78	60	31	171	14	14	16,3	9	129	400	4,90	TBV-3-G08-0001-M
			.51	5.35		3.94	3.15	3.07	2.36	1.22	6.73	.55	.55	.64	.35	5.08	5800	10.78	
10	G 5/8 BSP	16	13	139		100	80	78	60	31	171	14	14	18	9	129	400	4,90	TBV-3-G10-0001-M
			.51	5.47		3.94	3.15	3.07	2.36	1.22	6.73	.55	.55	.71	.35	5.08	5800	10.78	
12	G 3/4 BSP	20	18	154	138	113	85	88	67	36,5	306	16,5	17	18	8,5	159	315	6,70	TBV-3-G12-0001-M
			.71	6.06	5.43	4.45	3.35	3.46	2.64	1.44	12.05	.65	.67	.71	.33	6.26	4500	14.74	
16	G 1 BSP	25	23	172	138	119	85	103	82	47,5	306	16,5	17	20	8,5	174	315	8,30	TBV-3-G16-0001-M
			.91	6.77	5.43	4.69	3.35	4.06	3.23	1.87	12.05	.65	.67	.79	.33	6.85	4500	18.26	
20R	G 1-1/4 BSP	25/32	23	180	138	119	85	103	82	47,5	306	16,5	17	22	8,5	174	315	8,50	TBV-3-G20R-0001-M
			.91	7.09	5.43	4.69	3.35	4.06	3.23	1.87	12.05	.65	.67	.87	.33	6.85	4500	18.70	
24R	G 1-1/2 BSP	25/40	23	180	138	119	85	103	82	47,5	306	16,5	17	24	8,5	174	250	8,50	TBV-3-G24R-0001-M
			.91	7.09	5.43	4.69	3.35	4.06	3.23	1.87	12.05	.65	.67	.94	.33	6.85	3600	18.70	

Please note the pressure ratings of the tube connections.
Dimensions and design for stainless steel may vary.

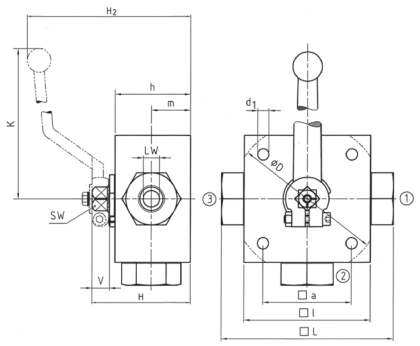

High-Pressure Block Body Ball Valve ▪ Type TBV-3
T-Bore Three-Way Selector ▪ Female NPT Thread (ANSI B1.20.1)

Female NPT Thread (ANSI B1.20.1)

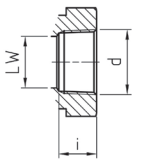

When ordering the standard option as indicated in the table below, the following materials will be supplied:

- Body, ball and stem: Carbon Steel
- Lever: Aluminium (STAUFF Sizes 02 and 04)
  Carbon Steel (STAUFF Sizes 06 to 24R)
- Ball seat: Delrin® (POM)
- O-rings: FKM (Viton®)

STAUFF Size	Thread Size d	Nominal Size DN	Dimensions (mm/in) LW	L	D	l	a	H	h	m	K	V	SW	i	d1	H2	Nom. Pressure (bar/PSI)	Weight (kg/lbs)	Order Codes (Standard Option)
02	1/8 NPT	4	5	100		70	55	58	40	22	160	14	12	10,5	6,5	101	500	1,60	TBV-3-N02-0001-M
			.20	3.94		2.76	2.17	2.28	1.57	.87	6.30	.55	.47	.41	.26	3.98	7250	3.52	
04	1/4 NPT	6	5	100		70	55	58	40	22	160	14	12	13,7	6,5	101	500	1,60	TBV-3-N04-0001-M
			.20	3.94		2.76	2.17	2.28	1.57	.87	6.30	.55	.47	.54	.26	3.98	7250	3.52	
06	3/8 NPT	10	8	115		80	65	68	50	27	171	14	14	13,5	6,5	119	500	2,80	TBV-3-N06-0001-M
			.31	4.53		3.15	2.56	2.68	1.97	1.06	6.73	.55	.55	.53	.26	4.69	7250	6.16	
08	1/2 NPT	13	13	136		100	80	78	60	31	171	14	14	17	9	129	400	5,20	TBV-3-N08-0001-M
			.51	5.35		3.94	3.15	3.07	2.36	1.22	6.73	.55	.55	.67	.35	5.08	5800	11.44	
12	3/4NPT	20	18	154	138	113	85	88	67	36,5	306	16,5	17	18,3	8,5	159	315	6,80	TBV-3-N12-0001-M
			.71	6.06	5.43	4.45	3.35	3.46	2.64	1.44	12.05	.65	.67	.72	.33	6.26	4500	14.96	
16	1 NPT	25	23	172	138	119	85	103	82	47,5	306	16,5	17	21,6	8,5	174	315	8,50	TBV-3-N16-0001-M
			.91	6.77	5.43	4.69	3.35	4.06	3.23	1.87	12.05	.65	.67	.85	.33	6.85	4500	18.70	
20R	1-1/4 NPT	25/32	23	180	138	119	85	103	82	47,5	306	16,5	17	22,1	8,5	174	315	8,80	TBV-3-N20R-0001-M
			.91	7.09	5.43	4.69	3.35	4.06	3.23	1.87	12.05	.65	.67	.87	.33	6.85	4500	19.36	
24R	1-1/2 NPT	25/40	23	180	138	119	85	103	82	47,5	306	16,5	17	22,1	8,5	174	250	8,80	TBV-3-N24R-0001-M
			.91	7.09	5.43	4.69	3.35	4.06	3.23	1.87	12.05	.65	.67	.87	.33	6.85	3600	19.36	

Please note the pressure ratings of the tube connections.
Dimensions and design for stainless steel may vary.

High-Pressure Block Body Ball Valve ▪ Type TBV-3
T-Bore Three-Way Selector ▪ Female UN/UNF Thread (SAE J 514)

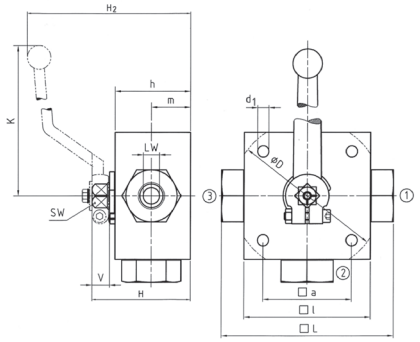

When ordering the standard option as indicated in the table below, the following materials will be supplied:

- Body, ball and stem: Carbon Steel
- Lever: Aluminium (STAUFF Size 04)
  Carbon Steel (STAUFF Sizes 06 and 16)
- Ball seat: Delrin® (POM)
- O-rings: FKM (Viton®)

Female UN/UNF Thread (SAE J 514)

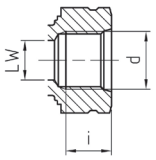

STAUFF Size	Thread Size d	Nominal Size DN	Dimensions (mm/in) LW	L	D	l	a	H	h	m	K	V	SW	i	d1	H2	Nom. Pressure (bar/PSI)	Weight (kg/lbs)	Order Codes (Standard Option)
04	7/16–20 UNF	6	5	100		70	55	58	40	22	160	14	12	14	6,5	101	500	1,60	TBV-3-U04-0001-M
	(1/4" SAE)		0,20	3,94		2,76	2,17	2,28	1,57	0,87	6,30	0,55	0,47	0,55	0,26	3,98	7250	3.52	
06	9/16–18 UNF	10	8	115		80	65	68	50	27	171	14	14	14	6,5	119	500	2,80	TBV-3-U06-0001-M
	(3/8" SAE)		0,31	4,53		3,15	2,56	2,68	1,97	1,06	6.73	0,55	0,55	0,55	0,26	4.69	7250	6.16	
08	3/4–16 UNF	13	13	144		100	80	78	60	31	171	14	14	16,3	9	129	400	5,20	TBV-3-U08-0001-M
	(1/2" SAE)		0,51	5.67		3,94	3,15	3,07	2,36	1,22	6.73	0,55	0,55	0,64	0,35	5.08	5800	11.44	
12	1-1/16–12 UN	20	18	164	138	113	85	88	67	36,5	306	16,5	17	18	8,5	159	315	6,80	TBV-3-U12-0001-M
	(3/4" SAE)		0,71	6.46	5,43	4,45	3,35	3,46	2,64	1,44	12.05	0,65	0,67	0,71	0,33	6.26	4500	14.96	
16	1-5/16–12 UN	25	23	180	138	119	85	103	82	47,5	306	16,5	17	20	8,5	174	315	8,50	TBV-3-U16-0001-M
	(1" SAE)		0,91	7.09	5,43	4,69	3,35	4,06	3,23	1,87	12.05	0,65	0,67	0,79	0,33	6.85	4500	18.70	

Please note the pressure ratings of the tube connections.
Dimensions and design for stainless steel may vary.

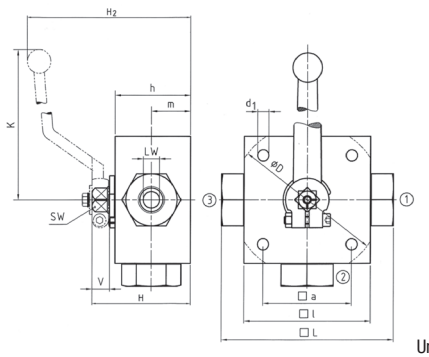

Union nuts and cutting rings are not included in delivery.

High-Pressure Block Body Ball Valve ▪ Type TBV-3
T-Bore Three-Way Selector ▪ 24° Cone Connection
Light Series (DIN 2353 / ISO 8434-1)

24° Cone Connection (DIN 2353 / ISO 8434-1)

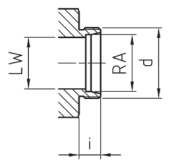

When ordering the standard option as indicated in the table below, the following materials will be supplied:

- Body, ball and stem: Carbon Steel
- Lever: Aluminium (STAUFF Sizes 02 and 04)
  Carbon Steel (STAUFF Sizes 05 to 20R)
- Ball seat: Delrin® (POM)
- O-rings: FKM (Viton®)

B

STAUFF Size	Tube/Thread Size d	Nominal Size DN	Dimensions (mm/in) RA	LW	L	D	l	a	H	h	m	K	V	SW	i	d1	H2	Nom. Pressure (bar/PSI)	Weight (kg/lbs)	Order Codes (Standard Option)
02	06L / M12 x 1,5	4	6	5	105		70	55	58	40	22	160	14	12	10	6,5	101	500	1,60	TBV-3-06L-0001-M
			.24	.20	4.13		2.76	2.17	2.28	1.57	.87	6.30	.55	.47	.39	.26	3.98	7250	3.52	
04	08L / M14 x 1,5	6	8	5	105		70	55	58	40	22	160	14	12	10	6,5	101	500	1,80	TBV-3-08L-0001-M
			.31	.20	4.13		2.76	2.17	2.28	1.57	.87	6.30	.55	.47	.39	.26	3.98	7250	3.96	
05	10L / M16 x 1,5	8	10	8	114		80	65	68	50	27	171	14	14	11	6,5	119	500	2,60	TBV-3-10L-0001-M
			.39	.31	4.49		3.15	2.56	2.68	1.97	1.06	6.73	.55	.55	.43	.26	4.69	7250	5.72	
06	12L / M18 x 1,5	10	12	8	114		80	65	68	50	27	171	14	14	11	6,5	119	500	2,60	TBV-3-12L-0001-M
			.47	.31	4.49		3.15	2.56	2.68	1.97	1.06	6.73	.55	.55	.43	.26	4.69	7250	5.72	
08	15L / M22 x 1,5	13	15	13	137		100	80	78	60	31	171	14	14	12	9	129	400	4,70	TBV-3-15L-0001-M
			.59	.51	5.39		3.94	3.15	3.07	2.36	1.22	6.73	.55	.55	.47	.35	5.08	5800	10.34	
10	18L / M26 x 1,5	16	18	18	137		113	85	88	67	36,5	171	16,5	17	12	8,5	129	400	4,70	TBV-3-18LDN16-0001-M
			.71	.71	5.39		4.45	3.35	3.46	2.64	1.44	6.73	.65	.67	.47	.33	5.08	5800	10.34	
12	22L / M30 x 2	20	22	23	152	138	119	85	103	82	47,5	306	16,5	17	14	8,5	159	315	6,60	TBV-3-22L-0001-M
			.87	.91	5.98	5.43	4.69	3.35	4.06	3.23	1.87	12.05	.65	.67	.55	.33	6.26	4500	14.52	
16	28L / M36 x 2	25	28	23	166	138	119	85	103	82	47,5	306	16,5	17	14	8,5	174	315	8,00	TBV-3-28L-0001-M
			1.10	.91	6.54	5.43	4.69	3.35	4.06	3.23	1.87	12.05	.65	.67	.55	.33	6.85	4500	17.60	
20R	35L / M45 x 2	25/32	35	23	170	138	119	85	103	82	47,5	306	16,5	17	16	8,5	174	315	8,12	TBV-3-35LDN25-0001-M
			1.38	.91	6.69	5.43	4.69	3.35	4.06	3.23	1.87	12.05	.65	.67	.63	.33	6.85	4500	17.86	

Please note the pressure ratings of the tube connections.
Dimensions and design for stainless steel may vary.

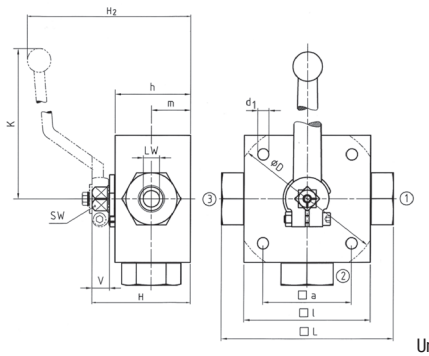

Union nuts and cutting rings are not included in delivery.

High-Pressure Block Body Ball Valve ▪ Type TBV-3
T-Bore Three-Way Selector ▪ 24° Cone Connection
Heavy Series (DIN 2353 / ISO 8434-1)

24° Cone Connection (DIN 2353 / ISO 8434-1)

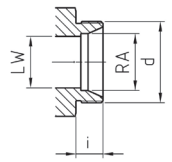

When ordering the standard option as indicated in the table below, the following materials will be supplied:

- Body, ball and stem: Carbon Steel
- Lever: Aluminium (STAUFF Sizes 02 and 04)
  Carbon Steel (STAUFF Sizes 05 to 20R)
- Ball seat: Delrin® (POM)
- O-rings: FKM (Viton®)

STAUFF Size	Tube/Thread Size d	Nominal Size DN	Dimensions (mm/in) RA	LW	L	D	l	a	H	h	m	K	V	SW	i	d1	H2	Nom. Pressure (bar/PSI)	Weight (kg/lbs)	Order Codes (Standard Option)
02	08S / M16 x 1,5	4	8	5	105		70	55	58	40	22	160	14	12	12	6,5	101	500	1,60	TBV-3-08S-0001-M
			.31	.20	4.13		2.76	2.17	2.28	1.57	.87	6.30	.55	.47	.47	.26	3.98	7250	3.52	
04	10S / M18 x 1,5	6	10	5	105		70	55	58	40	22	160	14	12	12	6,5	101	500	1,80	TBV-3-10S-0001-M
			.39	.20	4.13		2.76	2.17	2.28	1.57	.87	6.30	.55	.47	.47	.26	3.98	7250	3.96	
05	12S / M20 x 1,5	8	12	8	116		80	65	68	50	27	171	14	14	12	6,5	119	500	2,60	TBV-3-12S-0001-M
			.47	.31	4.57		3.15	2.56	2.68	1.97	1.06	6.73	.55	.55	.47	.26	4.69	7250	5.72	
06	14S / M22 x 1,5	10	14	8	120		80	65	68	50	27	171	14	14	14	6,5	119	500	2,60	TBV-3-14S-0001-M
			.55	.31	4.72		3.15	2.56	2.68	1.97	1.06	6.73	.55	.55	.55	.26	4.69	7250	5.72	
08	16S / M24 x 1,5	13	16	13	141		100	80	78	60	31	171	14	14	14	9	129	400	4,70	TBV-3-16S-0001-M
			.63	.51	5.55		3.94	3.15	3.07	2.36	1.22	6.73	.55	.55	.55	.35	5.08	5800	10.34	
10	20S / M30 x 2	16	20	18	145		113	80	88	67	36,5	171	16,5	14	16	8,5	129	400	4,70	TBV-3-20S-0001-M
			.79	.71	5.71		4.45	3.15	3.46	2.64	1.44	6.73	.65	.55	.63	.33	5.08	5800	10.34	
12	25S / M36 x 2	20	25	23	160	138	119	80	103	82	47,5	306	16,5	14	18	8,5	159	315	6,60	TBV-3-25S-0001-M
			.98	.91	6.30	5.43	4.69	3.15	4.06	3.23	1.87	12.05	.65	.55	.71	.33	6.26	4500	14.52	
16	30S / M42 x 2	25	30	23	176	138	119	80	103	82	47,5	306	16,5	14	20	8,5	174	315	8,00	TBV-3-30S-0001-M
			1.18	.91	6.93	5.43	4.69	3.15	4.06	3.23	1.87	12.05	.65	.55	.79	.33	6.85	4500	17.60	
20R	38S / M52 x 2	25/32	38	23	180	138	119	80	103	82	47,5	306	16,5	14	22	8,5	174	315	8,12	TBV-3-38SDN25-0001-M
			1.50	.91	7.09	5.43	4.69	3.15	4.06	3.23	1.87	12.05	.65	.55	.87	.33	6.85	4500	17.86	

Please note the pressure ratings of the tube connections.
Dimensions and design for stainless steel may vary.

B

High-Pressure Block Body Ball Valve ▪ Type TBV-4

Pressure inlet possible from all ports!

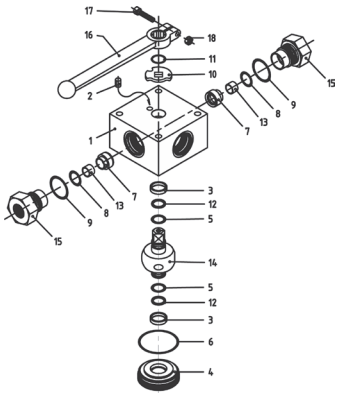

List of Components

No.	Qty.	Description
1	1	Body
2	1	Stop Pin
3*	2	Bearing
4	1	Trunnion Retainer
5*	2	Trunnion O-Ring
6*	1	Retainer O-Ring
7*	4	Ball Seat
8*	4	Seat O-Ring
9*	4	Connector O-Ring
10	1	Cam Plate
11	1	Snap Ring
12*	2	Trunnion Back Up Ring
13	4	Seat Support
14	1	Trunnion Ball
15	4	Connector
16	1	Handle
17	1	Handle Bolt

Characteristics

Four-way high-pressure block body ball valves designed for use as 4-way selectors (T-bore, 90° operation) for hydraulic applications

Standard Construction
- Block body design for in-line assembly
- Multi-way valve with trunnion-style ball
- Supplied with lever

Standard Materials
- Body: Carbon Steel, zinc/iron-plated
- Ball: Carbon Steel, hard chrome-plated
- Stem: Carbon Steel
- Lever: Aluminium (STAUFF Sizes 02 and 04)
  Carbon Steel (STAUFF Sizes 06 to 24R)
- Ball seat: Delrin® (POM)
- O-rings: FKM (Viton®)

Standard Connections Styles / Sizes
- Female BSP thread (DIN ISO 228) >G 1-1/2 BSP
- Female NPT thread (ANSI B1.20.1) >1-1/2 NPT
- Female UN/UNF thread (SAE J 514) >1-5/16–12 UN (1" SAE)
- 24° Cone Connection (DIN 2353 / ISO 8434-1) >35L
- 24° Cone Connection (DIN 2353 / ISO 8434-1) >38S

Pressure loaded seats at all ports!

Pressure Range
- Pressure range: up to 500 bar / 7250 PSI (depending on size and material combination of the ball valve)

Temperature Range
- Operating temperature range:
  -20 °C ... +100 °C / -4 °F ... + 212 °F

Options / Accessories
- Alternative lever designs/materials (see page 114)
- Locking devices (see pages 115-117)
- Actuator packages (see page 118)
- Limit switches (see page 118)
- Stainless Steel body
- Stainless Steel ball and stem
- Special ball seat and O-ring materials available for lower/higher temperatures and more aggressive media
- Seal kits (including items marked by * in the above list)

Porting Pattern
- Symbol : T
- Overlap: positive
- Operating: 90°

P13

- Stop of end position:

Please see pages 120-121 for alternative porting patterns.

Order Codes

TBV - 4 - G 02 - 0 0 0 1 - M - -

① ② ③ ④ ⑤ ⑥ ⑦ ⑧ ⑨ ⑩ ⑪

① Type

Multi-Way T-Bore Ball Valve	**TBV**

② Number of Ports

Four Ports (Four-Way Ball Valve)	**4**

③ Connection Style

Female BSP Thread (DIN ISO 228)	**G**
Female NPT Thread (ANSI B1.20.1)	**N**
Female UN/UNF Thread (SAE J 514)	**U**
24° Cone Connection (Light / Heavy Series)	**—**

Please contact STAUFF for alternative connection styles.

④ Connection Size

STAUFF Size (according to dimension table) for connection styles G, N and U:

02	**04**	**06**	**08**	**10**	**12**	**16**	**20R**	**24R**

Tube Size (according to dimension table) for 24° Cone Connection (Light Series):

06L	**08L**	**10L**	**12L**	**15L**	**18L**	**22L**	**28L**	**35L**

Tube Size (according to dimension table) for 24° Cone Connection (Heavy Series):

08S	**10S**	**12S**	**14S**	**16S**	**20S**	**25S**	**30S**	**38S**

Please contact STAUFF for alternative connection sizes.

⑤ Body Material / Surface Finishing

Carbon Steel, zinc/iron-plated	**0**
Stainless Steel V4A (AISI 316Ti)	**1**

Note: Stainless steel version may vary in dimensions and design.
Alternative materials / surface finishings are available upon request. Contact STAUFF for further information.

⑥ Ball / Stem Material

Ball: Carbon Steel, hard chrome-plated Stem: Carbon Steel	**0**
Ball / Stem: Stainless Steel V4A (AISI 316Ti)	**1**

Alternative materials / surface finishings are available upon request. Contact STAUFF for further information.

⑦ Ball Seat Material

Delrin® (POM)	**0**

Alternative materials are available upon request. Contact STAUFF for further information.

⑧ O-Ring Material

NBR (Buna-N®)	**0**
FKM (Viton®)	**1**
EPDM	**3**

Alternative materials are available upon request. Contact STAUFF for further information.

⑨ Manufacturing Code

Manufacturing code for all connection styles	**M**

⑩ Lever Options

Supplied with standard lever (according to table)	**—**
Supplied without lever	**0**

Alternative levers can be ordered separately. Please see page 114 for further information.

⑪ Accessories / Options

Supplied without accessories	**—**
Supplied with Locking Device LD4	**LD4**

Please see page 115-119 for further information and options.

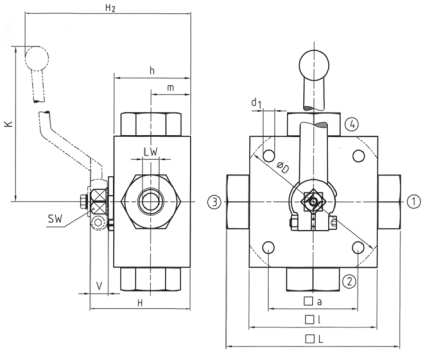

High-Pressure Block Body Ball Valve ▪ Type TBV-4
T-Bore Four-Way Selector ▪ Female BSP Thread (DIN ISO 228)

Female BSP Thread (DIN ISO 228)

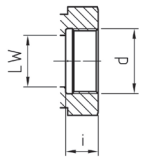

When ordering the standard option as indicated in the table below, the following materials will be supplied:

- Body, ball and stem: Carbon Steel
- Lever: Aluminium (STAUFF Sizes 02 and 04)
  Carbon Steel (STAUFF Sizes 06 to 24R)
- Ball seat: Delrin® (POM)
- O-rings: FKM (Viton®)

STAUFF Size	Thread Size d	Nominal Size DN	Dimensions (mm/in) LW	L	D	l	a	H	h	m	K	V	SW	i	d1	H2	Nom. Pressure (bar/PSI)	Weight (kg/lbs)	Order Codes (Standard Option)
02	G 1/8 BSP	4	5	100		70	55	58	40	22	160	14	12	10	6,5	101	500	1,60	TBV-4-G02-0001-M
			.20	3.94		2.76	2.17	2.28	1.57	.87	6.30	.55	.47	.39	.26	3.98	7250	3.52	
04	G 1/4 BSP	6	5	100		70	55	58	40	22	160	14	12	14	6,5	101	500	1,60	TBV-4-G04-0001-M
			.20	3.94		2.76	2.17	2.28	1.57	.87	6.30	.55	.47	.55	.26	3.98	7250	3.52	
06	G 3/8 BSP	10	8	115		80	65	68	50	27	171	14	14	14	6,5	119	500	2,80	TBV-4-G06-0001-M
			.31	4.53		3.15	2.56	2.68	1.97	1.06	6.73	.55	.55	.55	.26	4.69	7250	6.16	
08	G 1/2 BSP	13	13	136		100	80	78	60	31	171	14	14	16,3	9	129	400	4,90	TBV-4-G08-0001-M
			.51	5.35		3.94	3.15	3.07	2.36	1.22	6.73	.55	.55	.64	.35	5.08	5800	10.78	
10	G 5/8 BSP	16	13	139		100	80	78	60	31	171	14	14	18	9	129	400	4,90	TBV-4-G10-0001-M
			.51	5.47		3.94	3.15	3.07	2.36	1.22	6.73	.55	.55	.71	.35	5.08	5800	10.78	
12	G 3/4 BSP	20	18	154	138	113	85	88	67	36,5	306	16,5	17	18	8,5	159	315	6,80	TBV-4-G12-0001-M
			.71	6.06	5.43	4.45	3.35	3.46	2.64	1.44	12.05	.65	.67	.71	.33	6.26	4500	14.96	
16	G 1 BSP	25	23	172	138	119	85	103	82	47,5	306	16,5	17	20	8,5	174	315	8,50	TBV-4-G16-0001-M
			.91	6.77	5.43	4.69	3.35	4.06	3.23	1.87	12.05	.65	.67	.79	.33	6.85	4500	18.70	
20R	G 1-1/4 BSP	25/32	23	180	138	119	85	103	82	47,5	306	16,5	17	22	8,5	174	315	8,80	TBV-4-G20R-0001-M
			.91	7.09	5.43	4.69	3.35	4.06	3.23	1.87	12.05	.65	.67	.87	.33	6.85	4500	19.36	
24R	G 1-1/2 BSP	25/40	23	180	138	119	85	103	82	47,5	306	16,5	17	24	8,5	174	250	8,80	TBV-4-G24R-0001-M
			.91	7.09	5.43	4.69	3.35	4.06	3.23	1.87	12.05	.65	.67	.94	.33	6.85	3600	19.36	

Please note the pressure ratings of the tube connections.
Dimensions and design for stainless steel may vary.

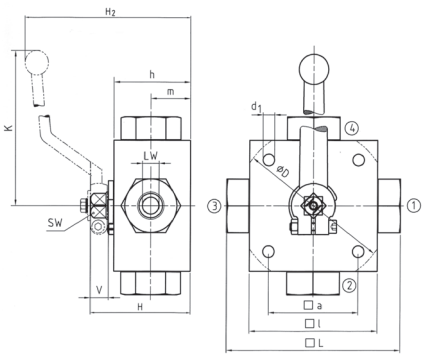

High-Pressure Block Body Ball Valve ▪ Type TBV-4
T-Bore Four-Way Selector ▪ Female NPT Thread (ANSI B1.20.1)

Female NPT Thread (ANSI B1.20.1)

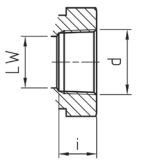

When ordering the standard option as indicated in the table below, the following materials will be supplied:

- Body, ball and stem: Carbon Steel
- Lever: Aluminium (STAUFF Sizes 02 and 04)
  Carbon Steel (STAUFF Sizes 06 to 24R)
- Ball seat: Delrin® (POM)
- O-rings: FKM (Viton®)

STAUFF Size	Thread Size d	Nominal Size DN	Dimensions (mm/in) LW	L	D	l	a	H	h	m	K	V	SW	i	d1	H2	Nom. Pressure (bar/PSI)	Weight (kg/lbs)	Order Codes (Standard Option)
02	1/8 NPT	4	5	100		70	55	58	40	22	160	14	12	10,5	6,5	101	500	1,60	TBV-4-N02-0001-M
			.20	3.94		2.76	2.17	2.28	1.57	.87	6.30	.55	.47	.41	.26	3.98	7250	3.52	
04	1/4 NPT	6	5	100		70	55	58	40	22	160	14	12	13,7	6,5	101	500	1,60	TBV-4-N04-0001-M
			.20	3.94		2.76	2.17	2.28	1.57	.87	6.30	.55	.47	.54	.26	3.98	7250	3.52	
06	3/8 NPT	10	8	115		80	65	68	50	27	171	14	14	13,5	6,5	119	500	2,80	TBV-4-N06-0001-M
			.31	4.53		3.15	2.56	2.68	1.97	1.06	6.73	.55	.55	.53	.26	4.69	7250	6.16	
08	1/2 NPT	13	13	136		100	80	78	60	31	171	14	14	17	9	129	400	4,90	TBV-4-N08-0001-M
			.51	5.35		3.94	3.15	3.07	2.36	1.22	6.73	.55	.55	.67	.35	5.08	5800	10.78	
12	3/4NPT	20	18	154	138	113	85	88	67	36,5	306	16,5	17	18,3	8,5	159	315	6,80	TBV-4-N12-0001-M
			.71	6.06	5.43	4.45	3.35	3.46	2.64	1.44	12.05	.65	.67	.72	.33	6.26	4500	14.96	
16	1 NPT	25	23	172	138	119	85	103	82	47,5	306	16,5	17	21,6	8,5	174	315	8,50	TBV-4-N16-0001-M
			.91	6.77	5.43	4.69	3.35	4.06	3.23	1.87	12.05	.65	.67	.85	.33	6.85	4500	18.70	
20R	1-1/4 NPT	25/32	23	180	138	119	85	103	82	47,5	306	16,5	17	22,1	8,5	174	315	8,80	TBV-4-N20R-0001-M
			.91	7.09	5.43	4.69	3.35	4.06	3.23	1.87	12.05	.65	.67	.87	.33	6.85	4500	19.36	
24R	1-1/2 NPT	25/40	23	180	138	119	85	103	82	47,5	306	16,5	17	22,1	8,5	174	250	8,80	TBV-4-N24R-0001-M
			.91	7.09	5.43	4.69	3.35	4.06	3.23	1.87	12.05	.65	.67	.87	.33	6.85	3600	19.36	

Please note the pressure ratings of the tube connections.
Dimensions and design for stainless steel may vary.

B

High-Pressure Block Body Ball Valve ▪ Type TBV-4
T-Bore Four-Way Selector ▪ Female UN/UNF Thread (SAE J 514)

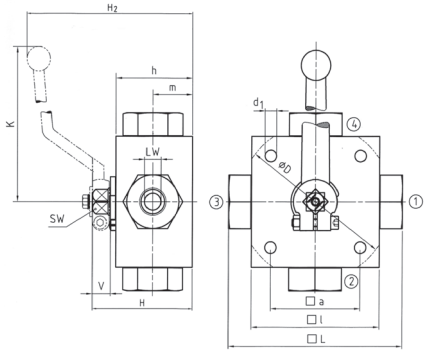

When ordering the standard option as indicated in the table below, the following materials will be supplied:

- Body, ball and stem: Carbon Steel
- Lever: Aluminium (STAUFF Size 04)
  Carbon Steel (STAUFF Sizes 06 and 16)
- Ball seat: Delrin® (POM)
- O-rings: FKM (Viton®)

Female UN/UNF Thread (SAE J 514)

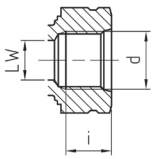

STAUFF Size	Thread Size d	Nominal Size DN	Dimensions (mm/in) LW	L	D	l	a	H	h	m	K	V	SW	i	d1	H2	Nom. Pressure (bar/PSI)	Weight (kg/lbs)	Order Codes (Standard Option)
04	7/16–20 UNF	6	5	100		70	55	58	40	22	160	14	12	14	6,5	101	500	1,60	TBV-4-U04-0001-M
	(1/4" SAE)		0,20	3,94		2,76	2,17	2,28	1,57	0,87	6,30	0,55	0,47	0,55	0,26	3,98	7250	3.52	
06	9/16–18 UNF	10	8	115		80	65	68	50	27	171	14	14	14	6,5	119	500	2,80	TBV-4-U06-0001-M
	(3/8" SAE)		0,31	4,53		3,15	2,56	2,68	1,97	1,06	6.73	0,55	0,55	0,55	0,26	4.69	7250	6.16	
08	3/4–16 UNF	13	13	144		100	80	78	60	31	171	14	14	16,3	9	129	400	5,20	TBV-4-U08-0001-M
	(1/2" SAE)		0,51	5.67		3,94	3,15	3,07	2,36	1,22	6.73	0,55	0,55	0,64	0,35	5.08	5800	11.44	
12	1-1/16–12 UN	20	18	164	138	113	85	88	67	36,5	306	16,5	17	18	8,5	159	315	6,80	TBV-4-U12-0001-M
	(3/4" SAE)		0,71	6.46	5,43	4,45	3,35	3,46	2,64	1,44	12.05	0,65	0,67	0,71	0,33	6.26	4500	14.96	
16	1-5/16–12 UN	25	23	180	138	119	85	103	82	47,5	306	16,5	17	20	8,5	174	315	8,50	TBV-4-U16-0001-M
	(1" SAE)		0,91	7.09	5,43	4,69	3,35	4,06	3,23	1,87	12.05	0,65	0,67	0,79	0,33	6.85	4500	18.70	

Please note the pressure ratings of the tube connections.
Dimensions and design for stainless steel may vary.

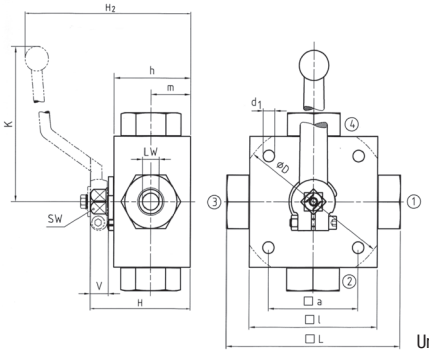

Union nuts and cutting rings are not included in delivery.

High-Pressure Block Body Ball Valve ▪ Type TBV-4
T-Bore Four-Way Selector ▪ 24° Cone Connection
Light Series (DIN 2353 / ISO 8434-1)

24° Cone Connection (DIN 2353 / ISO 8434-1)

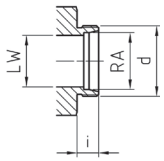

When ordering the standard option as indicated in the table below, the following materials will be supplied:

- Body, ball and stem: Carbon Steel
- Lever: Aluminium (STAUFF Sizes 02 and 04)
  Carbon Steel (STAUFF Sizes 05 to 20R)
- Ball seat: Delrin® (POM)
- O-rings: FKM (Viton®)

STAUFF Size	Tube/Thread Size d	Nominal Size DN	Dimensions (mm/in) RA	LW	L	D	l	a	H	h	m	K	V	SW	i	d1	H2	Nom. Pressure (bar/PSI)	Weight (kg/lbs)	Order Codes (Standard Option)
02	06L / M12 x 1,5	4	6	5	105		70	55	58	40	22	160	14	12	10	6,5	101	500	1,60	TBV-4-06L-0001-M
			.24	.20	4.13		2.76	2.17	2.28	1.57	.87	6.30	.55	.47	.39	.26	3.98	7250	3.52	
04	08L / M14 x 1,5	6	8	5	105		70	55	58	40	22	160	14	12	10	6,5	101	500	1,80	TBV-4-08L-0001-M
			.31	.20	4.13		2.76	2.17	2.28	1.57	.87	6.30	.55	.47	.39	.26	3.98	7250	3.96	
05	10L / M16 x 1,5	8	10	8	114		80	65	68	50	27	171	14	14	11	6,5	119	500	2,60	TBV-4-10L-0001-M
			.39	.31	4.49		3.15	2.56	2.68	1.97	1.06	6.73	.55	.55	.43	.26	4.69	7250	5.72	
06	12L / M18 x 1,5	10	12	8	114		80	65	68	50	27	171	14	14	11	6,5	119	500	2,60	TBV-4-12L-0001-M
			.47	.31	4.49		3.15	2.56	2.68	1.97	1.06	6.73	.55	.55	.43	.26	4.69	7250	5.72	
08	15L / M22 x 1,5	13	15	13	137		100	80	78	60	31	171	14	14	12	9	129	400	4,70	TBV-4-15L-0001-M
			.59	.51	5.39		3.94	3.15	3.07	2.36	1.22	6.73	.55	.55	.47	.35	5.08	5800	10.34	
10	18L / M26 x 1,5	16	18	18	137		113	85	88	67	36,5	171	16,5	17	12	8,5	129	400	4,70	TBV-4-18LDN16-0001-M
			.71	.71	5.39		4.45	3.35	3.46	2.64	1.44	6.73	.65	.67	.47	.33	5.08	5800	10.34	
12	22L / M30 x 2	20	22	23	152	138	119	85	103	82	47,5	306	16,5	17	14	8,5	159	315	6,60	TBV-4-22L-0001-M
			.87	.91	5.98	5.43	4.69	3.35	4.06	3.23	1.87	12.05	.65	.67	.55	.33	6.26	4500	14.52	
16	28L / M36 x 2	25	28	23	166	138	119	85	103	82	47,5	306	16,5	17	14	8,5	174	315	8,00	TBV-4-28L-0001-M
			1.10	.91	6.54	5.43	4.69	3.35	4.06	3.23	1.87	12.05	.65	.67	.55	.33	6.85	4500	17.60	
20R	35L / M45 x 2	25/32	35	23	170	138	119	85	103	82	47,5	306	16,5	17	16	8,5	174	315	8,12	TBV-4-35LDN25-0001-M
			1.38	.91	6.69	5.43	4.69	3.35	4.06	3.23	1.87	12.05	.65	.67	.63	.33	6.85	4500	17.86	

Please note the pressure ratings of the tube connections.
Dimensions and design for stainless steel may vary.

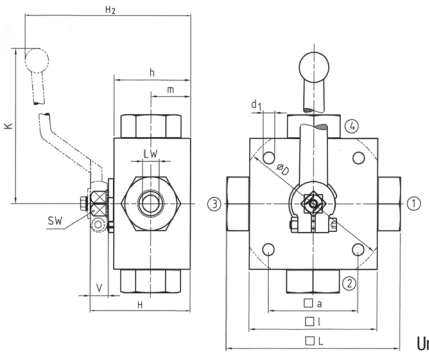

Union nuts and cutting rings are not included in delivery.

High-Pressure Block Body Ball Valve ▪ Type TBV-4
T-Bore Four-Way Selector ▪ 24° Cone Connection
Heavy Series (DIN 2353 / ISO 8434-1)

24° Cone Connection (DIN 2353 / ISO 8434-1)

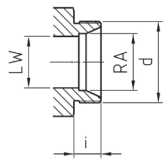

When ordering the standard option as indicated in the table below, the following materials will be supplied:

- Body, ball and stem: Carbon Steel
- Lever: Aluminium (STAUFF Sizes 02 and 04)
  Carbon Steel (STAUFF Sizes 05 to 20R)
- Ball seat: Delrin® (POM)
- O-rings: FKM (Viton®)

STAUFF Size	Tube/Thread Size d	Nominal Size DN	Dimensions (mm/in) RA	LW	L	D	l	a	H	h	m	K	V	SW	i	d1	H2	Nom. Pressure (bar/PSI)	Weight (kg/lbs)	Order Codes (Standard Option)
02	08S / M16 x 1,5	4	8	5	105		70	55	58	40	22	160	14	12	12	6,5	101	500	1,60	TBV-4-08S-0001-M
			.31	.20	4.13		2.76	2.17	2.28	1.57	.87	6.30	.55	.47	.47	.26	3.98	7250	3.52	
04	10S / M18 x 1,5	6	10	5	105		70	55	58	40	22	160	14	12	12	6,5	101	500	1,80	TBV-4-10S-0001-M
			.39	.20	4.13		2.76	2.17	2.28	1.57	.87	6.30	.55	.47	.47	.26	3.98	7250	3.96	
05	12S / M20 x 1,5	8	12	8	116		80	65	68	50	27	171	14	14	12	6,5	119	500	2,60	TBV-4-12S-0001-M
			.47	.31	4.57		3.15	2.56	2.68	1.97	1.06	6.73	.55	.55	.47	.26	4.69	7250	5.72	
06	14S / M22 x 1,5	10	14	8	120		80	65	68	50	27	171	14	14	14	6,5	119	500	2,60	TBV-4-14S-0001-M
			.55	.31	4.72		3.15	2.56	2.68	1.97	1.06	6.73	.55	.55	.55	.26	4.69	7250	5.72	
08	16S / M24 x 1,5	13	16	13	141		100	80	78	60	31	171	14	14	14	9	129	400	4,70	TBV-4-16S-0001-M
			.63	.51	5.55		3.94	3.15	3.07	2.36	1.22	6.73	.55	.55	.55	.35	5.08	5800	10.34	
10	20S / M30 x 2	16	20	18	145		113	80	88	67	36,5	171	16,5	14	16	8,5	129	400	4,70	TBV-4-20S-0001-M
			.79	.71	5.71		4.45	3.15	3.46	2.64	1.44	6.73	.65	.55	.63	.33	5.08	5800	10.34	
12	25S / M36 x 2	20	25	23	160	138	119	80	103	82	47,5	306	16,5	14	18	8,5	159	315	6,60	TBV-4-25S-0001-M
			.98	.91	6.30	5.43	4.69	3.15	4.06	3.23	1.87	12.05	.65	.55	.71	.33	6.26	4500	14.52	
16	30S / M42 x 2	25	30	23	176	138	119	80	103	82	47,5	306	16,5	14	20	8,5	174	315	8,00	TBV-4-30S-0001-M
			1.18	.91	6.93	5.43	4.69	3.15	4.06	3.23	1.87	12.05	.65	.55	.79	.33	6.85	4500	17.60	
20R	38S / M52 x 2	25/32	38	23	180	138	119	80	103	82	47,5	306	16,5	14	22	8,5	174	315	8,12	TBV-4-38SDN25-0001-M
			1.50	.91	7.09	5.43	4.69	3.15	4.06	3.23	1.87	12.05	.65	.55	.87	.33	6.85	4500	17.86	

Please note the pressure ratings of the tube connections.
Dimensions and design for stainless steel may vary.

B

High-Pressure Block Body Ball Valve ▪ Type XBV-4

Pressure inlet possible from all ports!

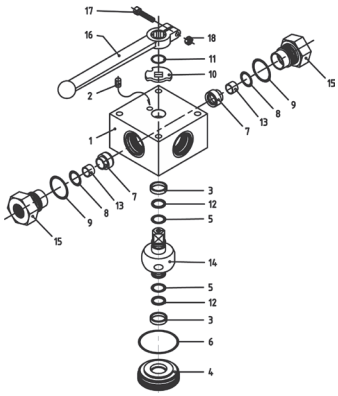

List of Components

No.	Qty.	Description
1	1	Body
2	1	Stop Pin
3*	2	Bearing
4	1	Trunnion Retainer
5*	2	Trunnion O-Ring
6*	1	Retainer O-Ring
7*	4	Ball Seat
8*	4	Seat O-Ring
9*	4	Connector O-Ring
10	1	Cam Plate
11	1	Snap Ring
12*	2	Trunnion Back Up Ring
13	4	Seat Support
14	1	Trunnion Ball
15	4	Connector
16	1	Handle
17	1	Handle Bolt

Characteristics

Four-way high-pressure block body ball valves designed for use as 4-way selectors (double L-bore, 90° operation with closed position) for hydraulic applications

Standard Construction
- Block body design for in-line assembly
- Multi-way valve with trunnion-style ball
- Supplied with lever

Standard Materials
- Body: Carbon Steel, zinc/iron-plated
- Ball: Carbon Steel, hard chrome-plated
- Stem: Carbon Steel
- Lever: Aluminium (STAUFF Sizes 02 and 04)
  Carbon Steel (STAUFF Sizes 06 to 24R)
- Ball seat: Delrin® (POM)
- O-rings: FKM (Viton®)

Standard Connections Styles / Sizes
- Female BSP thread (DIN ISO 228) >G 1-1/2 BSP
- Female NPT thread (ANSI B1.20.1) >1-1/2 NPT
- Female UN/UNF thread (SAE J 514) >1-5/16–12 UN (1" SAE)
- 24° Cone Connection (DIN 2353 / ISO 8434-1) >35L
- 24° Cone Connection (DIN 2353 / ISO 8434-1) >38S

Pressure loaded seats at all ports!

Pressure Range
- Pressure range: up to 500 bar / 7250 PSI (depending on size and material combination of the ball valve)

Temperature Range
- Operating temperature range:
  -20 °C ... +100 °C / -4 °F ... + 212 °F

Options / Accessories
- Alternative lever designs/materials (see page 114)
- Locking devices (see pages 115-117)
- Actuator packages (see page 118)
- Limit switches (see page 118)
- Stainless Steel body
- Stainless Steel ball and stem
- Special ball seat and O-ring materials available for lower/higher temperatures and more aggressive media
- Seal kits (including items marked by * in the above list)

Porting Pattern
- Symbol : X
- Overlap: negative
- Operating: 90° with closed position
- Stop of end position:

P14

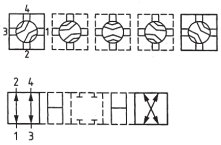

Please see pages 120-121 for alternative porting patterns.

Order Codes

XBV	-	4	-	G	02	-	0	0	0	1	-	M	-	-
①		②		③	④		⑤	⑥	⑦	⑧		⑨	⑩	⑪

① Type

Multi-Way Double L-Bore Ball Valve	XBV

② Number of Ports

Four Ports (Four-Way Ball Valve)	4

③ Connection Style

Female BSP Thread (DIN ISO 228)	G
Female NPT Thread (ANSI B1.20.1)	N
Female UN/UNF Thread (SAE J 514)	U
24° Cone Connection (Light / Heavy Series)	—

Please contact STAUFF for alternative connection styles.

④ Connection Size

STAUFF Size (according to dimension table) for connection styles G, N and U:

02	04	06	08	10	12	16	20R	24R

Tube Size (according to dimension table) for 24° Cone Connection (Light Series):

06L	08L	10L	12L	15L	18L	22L	28L	35L

Tube Size (according to dimension table) for 24° Cone Connection (Heavy Series):

08S	10S	12S	14S	16S	20S	25S	30S	38S

Please contact STAUFF for alternative connection sizes.

⑤ Body Material / Surface Finishing

Carbon Steel, zinc/iron-plated	0
Stainless Steel V4A (AISI 316Ti)	1

Note: Stainless steel version may vary in dimensions and design.
Alternative materials / surface finishings are available upon request. Contact STAUFF for further information.

⑥ Ball / Stem Material

Ball: Carbon Steel, hard chrome-plated Stem: Carbon Steel	0
Ball / Stem: Stainless Steel V4A (AISI 316Ti)	1

Alternative materials / surface finishings are available upon request. Contact STAUFF for further information.

⑦ Ball Seat Material

Delrin® (POM)	0

Alternative materials are available upon request. Contact STAUFF for further information.

⑧ O-Ring Material

NBR (Buna-N®)	0
FKM (Viton®)	1
EPDM	3

Alternative materials are available upon request. Contact STAUFF for further information.

⑨ Manufacturing Code

Manufacturing code for all connection styles	M

⑩ Lever Options

Supplied with standard lever (according to table)	—
Supplied without lever	0

Alternative levers can be ordered separately. Please see page 114 for further information.

⑪ Accessories / Options

Supplied without accessories	—
Supplied with Locking Device LD4	LD4

Please see page 115-119 for further information and options.

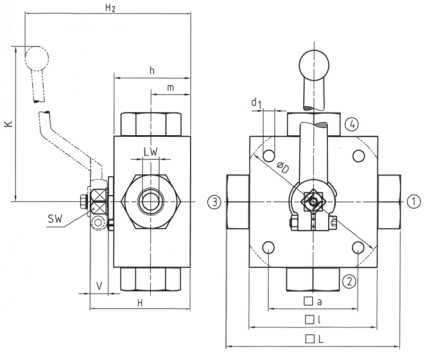

High-Pressure Block Body Ball Valve ▪ Type XBV-4
Double L-Bore Four-Way Selector ▪ Female BSP Thread (DIN ISO 228)

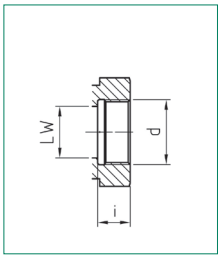

When ordering the standard option as indicated in the table below, the following materials will be supplied:

- Body, ball and stem: Carbon Steel
- Lever: Aluminium (STAUFF Sizes 02 and 04)
  Carbon Steel (STAUFF Sizes 06 to 24R)
- Ball seat: Delrin® (POM)
- O-rings: FKM (Viton®)

STAUFF Size	Thread Size d	Nominal Size DN	Dimensions (mm/in) LW	L	D	l	a	H	h	m	K	V	SW	i	d1	H2	Nom. Pressure (bar/PSI)	Weight (kg/lbs)	Order Codes (Standard Option)
02	G 1/8 BSP	4	4	100		70	55	58	40	22	160	14	12	10	6,5	101	500	1,60	XBV-4-G02-0001-M
			.16	3.94		2.76	2.17	2.28	1.57	.87	6.30	.55	.47	.39	.26	3.98	7250	3.52	
04	G 1/4 BSP	6	4	100		70	55	58	40	22	160	14	12	14	6,5	101	500	1,60	XBV-4-G04-0001-M
			.16	3.94		2.76	2.17	2.28	1.57	.87	6.30	.55	.47	.55	.26	3.98	7250	3.52	
06	G 3/8 BSP	10	7	115		80	65	68	50	27	171	14	14	14	6,5	119	500	2,80	XBV-4-G06-0001-M
			.28	4.53		3.15	2.56	2.68	1.97	1.06	6.73	.55	.55	.55	.26	4.69	7250	6.16	
08	G 1/2 BSP	13	10	136		100	80	78	60	31	171	14	14	16,3	9	129	400	4,90	XBV-4-G08-0001-M
			.39	5.35		3.94	3.15	3.07	2.36	1.22	6.73	.55	.55	.64	.35	5.08	5800	10.78	
10	G 5/8 BSP	16	10	139		100	80	78	60	31	171	14	14	18	9	129	400	4,90	XBV-4-G10-0001-M
			.39	5.47		3.94	3.15	3.07	2.36	1.22	6.73	.55	.55	.71	.35	5.08	5800	10.78	
12	G 3/4 BSP	20	14	154	138	113	85	88	67	36,5	306	16,5	17	18	8,5	159	315	6,80	XBV-4-G12-0001-M
			.55	6.06	5.43	4.45	3.35	3.46	2.64	1.44	12.05	.65	.67	.71	.33	6.26	4500	14.96	
16	G 1 BSP	25	17	172	138	119	85	103	82	47,5	306	16,5	17	20	8,5	174	315	8,50	XBV-4-G16-0001-M
			.67	6.77	5.43	4.69	3.35	4.06	3.23	1.87	12.05	.65	.67	.79	.33	6.85	4500	18.70	
20R	G 1-1/4 BSP	25/32	17	180	138	119	85	103	82	47,5	306	16,5	17	22	8,5	174	315	8,80	XBV-4-G20R-0001-M
			.67	7.09	5.43	4.69	3.35	4.06	3.23	1.87	12.05	.65	.67	.87	.33	6.85	4500	19.36	
24R	G 1-1/2 BSP	25/40	17	180	138	119	85	103	82	47,5	306	16,5	17	24	8,5	174	250	8,80	XBV-4-G24R-0001-M
			.67	7.09	5.43	4.69	3.35	4.06	3.23	1.87	12.05	.65	.67	.94	.33	6.85	3600	19.36	

Please note the pressure ratings of the tube connections.
Dimensions and design for stainless steel may vary.

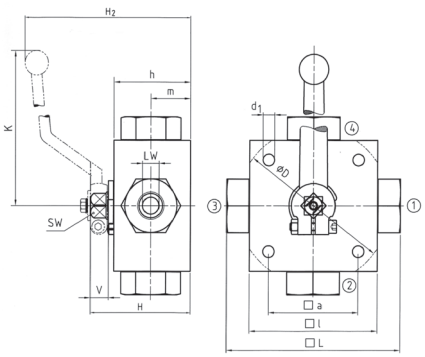

High-Pressure Block Body Ball Valve ▪ Type XBV-4
Double L-Bore Four-Way Selector ▪ Female NPT Thread (ANSI B1.20.1)

Female NPT Thread (ANSI B1.20.1)

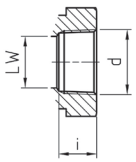

When ordering the standard option as indicated in the table below, the following materials will be supplied:

- Body, ball and stem: Carbon Steel
- Lever: Aluminium (STAUFF Sizes 02 and 04)
  Carbon Steel (STAUFF Sizes 06 to 24R)
- Ball seat: Delrin® (POM)
- O-rings: FKM (Viton®)

STAUFF Size	Thread Size d	Nominal Size DN	Dimensions (mm/in) LW	L	D	l	a	H	h	m	K	V	SW	i	d1	H2	Nom. Pressure (bar/PSI)	Weight (kg/lbs)	Order Codes (Standard Option)
02	1/8 NPT	4	4	100		70	55	58	40	22	160	14	12	10,5	6,5	101	500	1,60	XBV-4-N02-0001-M
			.16	3.94		2.76	2.17	2.28	1.57	.87	6.30	.55	.47	.41	.26	3.98	7250	3.52	
04	1/4 NPT	6	4	100		70	55	58	40	22	160	14	12	13,7	6,5	101	500	1,60	XBV-4-N04-0001-M
			.16	3.94		2.76	2.17	2.28	1.57	.87	6.30	.55	.47	.54	.26	3.98	7250	3.52	
06	3/8 NPT	10	7	115		80	65	68	50	27	171	14	14	13,5	6,5	119	500	2,80	XBV-4-N06-0001-M
			.28	4.53		3.15	2.56	2.68	1.97	1.06	6.73	.55	.55	.53	.26	4.69	7250	6.16	
08	1/2 NPT	13	10	136		100	80	78	60	31	171	14	14	17	9	129	400	4,90	XBV-4-N08-0001-M
			.39	5.35		3.94	3.15	3.07	2.36	1.22	6.73	.55	.55	.67	.35	5.08	5800	10.78	
12	3/4NPT	20	14	154	138	113	85	88	67	36,5	306	16,5	17	18,3	8,5	159	315	6,80	XBV-4-N12-0001-M
			.55	6.06	5.43	4.45	3.35	3.46	2.64	1.44	12.05	.65	.67	.72	.33	6.26	4500	14.96	
16	1 NPT	25	17	172	138	119	85	103	82	47,5	306	16,5	17	21,6	8,5	174	315	8,50	XBV-4-N16-0001-M
			.67	6.77	5.43	4.69	3.35	4.06	3.23	1.87	12.05	.65	.67	.85	.33	6.85	4500	18.70	
20R	1-1/4 NPT	25/32	17	180	138	119	85	103	82	47,5	306	16,5	17	22,1	8,5	174	315	8,80	XBV-4-N20R-0001-M
			.67	7.09	5.43	4.69	3.35	4.06	3.23	1.87	12.05	.65	.67	.87	.33	6.85	4500	19.36	
24R	1-1/2 NPT	25/40	17	180	138	119	85	103	82	47,5	306	16,5	17	22,1	8,5	174	250	8,80	XBV-4-N24R-0001-M
			.67	7.09	5.43	4.69	3.35	4.06	3.23	1.87	12.05	.65	.67	.87	.33	6.85	3600	19.36	

Please note the pressure ratings of the tube connections.
Dimensions and design for stainless steel may vary.

High-Pressure Block Body Ball Valve ▪ Type XBV-4
Double L-Bore Four-Way Selector ▪ Female UN/UNF Thread (SAE J 514)

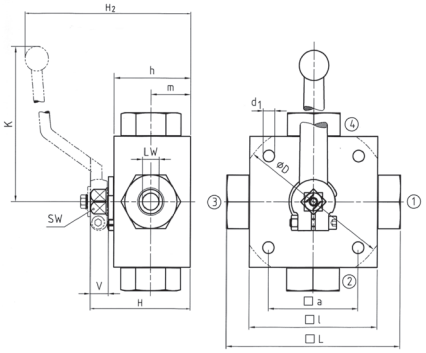

B

When ordering the standard option as indicated in the table below, the following materials will be supplied:

- Body, ball and stem: Carbon Steel
- Lever: Aluminium (STAUFF Size 04)
  Carbon Steel (STAUFF Sizes 06 and 16)
- Ball seat: Delrin® (POM)
- O-rings: FKM (Viton®)

Female UN/UNF Thread (SAE J 514)

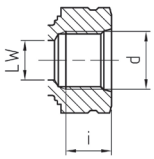

STAUFF Size	Thread Size d	Nominal Size DN	Dimensions (mm/in) LW	L	D	l	a	H	h	m	K	V	SW	i	d1	H2	Nom. Pressure (bar/PSI)	Weight (kg/lbs)	Order Codes (Standard Option)
04	7/16–20 UNF	6	4	100		70	55	58	40	22	160	14	12	14	6,5	101	500	1,60	XBV-4-U04-0001-M
	(1/4" SAE)		.16	3,94		2,76	2,17	2,28	1,57	0,87	6,30	0,55	0,47	0,55	0,26	3,98	7250	3.52	
06	9/16–18 UNF	10	7	115		80	65	68	50	27	171	14	14	14	6,5	119	500	2,80	XBV-4-U06-0001-M
	(3/8" SAE)		.28	4,53		3,15	2,56	2,68	1,97	1,06	6.73	0,55	0,55	0,55	0,26	4.69	7250	6.16	
08	3/4–16 UNF	13	10	144		100	80	78	60	31	171	14	14	16,3	9	129	400	5,20	XBV-4-U08-0001-M
	(1/2" SAE)		.39	5.67		3,94	3,15	3,07	2,36	1,22	6.73	0,55	0,55	0,64	0,35	5.08	5800	11.44	
12	1-1/16–12 UN	20	14	164	138	113	85	88	67	36,5	306	16,5	17	18	8,5	159	315	6,80	XBV-4-U12-0001-M
	(3/4" SAE)		.55	6.46	5,43	4,45	3,35	3,46	2,64	1,44	12.05	0,65	0,67	0,71	0,33	6.26	4500	14.96	
16	1-5/16–12 UN	25	17	180	138	119	85	103	82	47,5	306	16,5	17	20	8,5	174	315	8,50	XBV-4-U16-0001-M
	(1" SAE)		.67	7.09	5,43	4,69	3,35	4,06	3,23	1,87	12.05	0,65	0,67	0,79	0,33	6.85	4500	18.70	

Please note the pressure ratings of the tube connections.
Dimensions and design for stainless steel may vary.

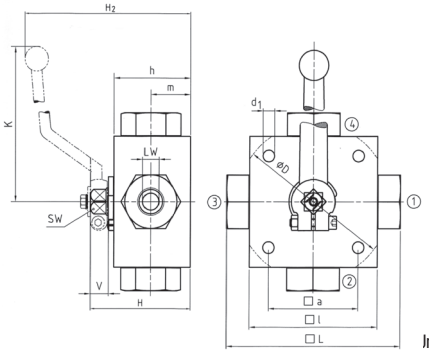

High-Pressure Block Body Ball Valve ▪ Type XBV-4
Double L-Bore Four-Way Selector ▪ 24° Cone Connection
Light Series (DIN 2353 / ISO 8434-1)

24° Cone Connection (DIN 2353 / ISO 8434-1)

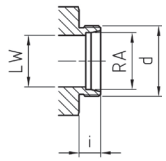

When ordering the standard option as indicated in the table below, the following materials will be supplied:

- Body, ball and stem: Carbon Steel
- Lever: Aluminium (STAUFF Sizes 02 and 04)
  Carbon Steel (STAUFF Sizes 05 to 20R)
- Ball seat: Delrin® (POM)
- O-rings: FKM (Viton®)

Inion nuts and cutting rings are not included in delivery.

STAUFF Size	Tube/Thread Size d	Nominal Size DN	Dimensions (mm/in) RA	LW	L	D	l	a	H	h	m	K	V	SW	i	d1	H2	Nom. Pressure (bar/PSI)	Weight (kg/lbs)	Order Codes (Standard Option)
02	06L / M12 x 1,5	4	6	4	105		70	55	58	40	22	160	14	12	10	6,5	101	500	1,60	XBV-4-06L-0001-M
			.24	.16	4.13		2.76	2.17	2.28	1.57	.87	6.30	.55	.47	.39	.26	3.98	7250	3.52	
04	08L / M14 x 1,5	6	8	4	105		70	55	58	40	22	160	14	12	10	6,5	101	500	1,80	XBV-4-08L-0001-M
			.31	.16	4.13		2.76	2.17	2.28	1.57	.87	6.30	.55	.47	.39	.26	3.98	7250	3.96	
05	10L / M16 x 1,5	8	10	7	114		80	65	68	50	27	171	14	14	11	6,5	119	500	2,60	XBV-4-10L-0001-M
			.39	.28	4.49		3.15	2.56	2.68	1.97	1.06	6.73	.55	.55	.43	.26	4.69	7250	5.72	
06	12L / M18 x 1,5	10	12	7	114		80	65	68	50	27	171	14	14	11	6,5	119	500	2,60	XBV-4-12L-0001-M
			.47	.28	4.49		3.15	2.56	2.68	1.97	1.06	6.73	.55	.55	.43	.26	4.69	7250	5.72	
08	15L / M22 x 1,5	13	15	10	137		100	80	78	60	31	171	14	14	12	9	129	400	4,70	XBV-4-15L-0001-M
			.59	.39	5.39		3.94	3.15	3.07	2.36	1.22	6.73	.55	.55	.47	.35	5.08	5800	10.34	
10	18L / M26 x 1,5	16	18	10	137		113	85	88	67	36,5	171	16,5	17	12	8,5	129	400	4,70	XBV-4-18LDN16-0001-M
			.71	.39	5.39		4.45	3.35	3.46	2.64	1.44	6.73	.65	.67	.47	.33	5.08	5800	10.34	
12	22L / M30 x 2	20	22	14	152	138	119	85	103	82	47,5	306	16,5	17	14	8,5	159	315	6,60	XBV-4-22L-0001-M
			.87	.55	5.98	5.43	4.69	3.35	4.06	3.23	1.87	12.05	.65	.67	.55	.33	6.26	4500	14.52	
16	28L / M36 x 2	25	28	17	166	138	119	85	103	82	47,5	306	16,5	17	14	8,5	174	315	8,00	XBV-4-28L-0001-M
			1.10	.67	6.54	5.43	4.69	3.35	4.06	3.23	1.87	12.05	.65	.67	.55	.33	6.85	4500	17.60	
20R	35L / M45 x 2	25/32	35	17	170	138	119	85	103	82	47,5	306	16,5	17	16	8,5	174	315	8,12	XBV-4-35LDN25-0001-M
			1.38	.67	6.69	5.43	4.69	3.35	4.06	3.23	1.87	12.05	.65	.67	.63	.33	6.85	4500	17.86	

Please note the pressure ratings of the tube connections.
Dimensions and design for stainless steel may vary.

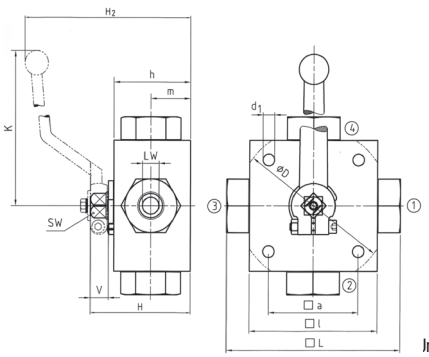

High-Pressure Block Body Ball Valve ▪ Type XBV-4
Double L-Bore Four-Way Selector ▪ 24° Cone Connection
Heavy Series (DIN 2353 / ISO 8434-1)

24° Cone Connection (DIN 2353 / ISO 8434-1)

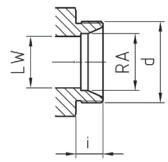

When ordering the standard option as indicated in the table below, the following materials will be supplied:

- Body, ball and stem: Carbon Steel
- Lever: Aluminium (STAUFF Sizes 02 and 04)
  Carbon Steel (STAUFF Sizes 05 to 20R)
- Ball seat: Delrin® (POM)
- O-rings: FKM (Viton®)

Inion nuts and cutting rings are not included in delivery.

STAUFF Size	Thread Size d	Nominal Size DN	Dimensions (mm/in) RA	LW	L	D	l	a	H	h	m	K	V	SW	i	d1	H2	Nom. Pressure (bar/PSI)	Weight (kg/lbs)	Order Codes (Standard Option)
02	08S / M16 x 1,5	4	8	4	105		70	55	58	40	22	160	14	12	12	6,5	101	500	1,60	XBV-4-08S-0001-M
			.31	.16	4.13		2.76	2.17	2.28	1.57	.87	6.30	.55	.47	.47	.26	3.98	7250	3.52	
04	10S / M18 x 1,5	6	10	4	105		70	55	58	40	22	160	14	12	12	6,5	101	500	1,80	XBV-4-10S-0001-M
			.39	.16	4.13		2.76	2.17	2.28	1.57	.87	6.30	.55	.47	.47	.26	3.98	7250	3.96	
05	12S / M20 x 1,5	8	12	7	116		80	65	68	50	27	171	14	14	12	6,5	119	500	2,60	XBV-4-12S-0001-M
			.47	.28	4.57		3.15	2.56	2.68	1.97	1.06	6.73	.55	.55	.47	.26	4.69	7250	5.72	
06	14S / M22 x 1,5	10	14	7	120		80	65	68	50	27	171	14	14	14	6,5	119	500	2,60	XBV-4-14S-0001-M
			.55	.28	4.72		3.15	2.56	2.68	1.97	1.06	6.73	.55	.55	.55	.26	4.69	7250	5.72	
08	16S / M24 x 1,5	13	16	10	141		100	80	78	60	31	171	14	14	14	9	129	400	4,70	XBV-4-16S-0001-M
			.63	.39	5.55		3.94	3.15	3.07	2.36	1.22	6.73	.55	.55	.55	.35	5.08	5800	10.34	
10	20S / M30 x 2	16	20	10	145		113	80	88	67	36,5	171	16,5	14	16	8,5	129	400	4,70	XBV-4-20S-0001-M
			.79	.39	5.71		4.45	3.15	3.46	2.64	1.44	6.73	.65	.55	.63	.33	5.08	5800	10.34	
12	25S / M36 x 2	20	25	14	160	138	119	80	103	82	47,5	306	16,5	14	18	8,5	159	315	6,60	XBV-4-25S-0001-M
			.98	.55	6.30	5.43	4.69	3.15	4.06	3.23	1.87	12.05	.65	.55	.71	.33	6.26	4500	14.52	
16	30S / M42 x 2	25	30	17	176	138	119	80	103	82	47,5	306	16,5	14	20	8,5	174	315	8,00	XBV-4-30S-0001-M
			1.18	.67	6.93	5.43	4.69	3.15	4.06	3.23	1.87	12.05	.65	.55	.79	.33	6.85	4500	17.60	
20R	38S / M52 x 2	25/32	38	17	180	138	119	80	103	82	47,5	306	16,5	14	22	8,5	174	315	8,12	XBV-4-38SDN25-0001-M
			1.50	.67	7.09	5.43	4.69	3.15	4.06	3.23	1.87	12.05	.65	.55	.87	.33	6.85	4500	17.86	

Please note the pressure ratings of the tube connections.
Dimensions and design for stainless steel may vary.

Flow Control and Check Valves

Throttle and Shut-Off Valve (In-Line Assembly) DV — 92

Flow Control Valve (In-Line Assembly) DRV — 93

Throttle and Shut-Off Valve (Manifold Assembly) DVP — 94

Flow Control Valve (Manifold Assembly) DRVP — 95

Throttle and Shut-Off Valve (Cartridge Assembly) DVE — 96

Pressure Compensated Flow Control Valve (In-Line Assembly) PNDRV — 97

Heavy-Duty Check Valve (In-Line Assembly) RV — 98

Medium-Duty Check Valve (In-Line Assembly) RVM — 99

Flow Characteristics — 100

C

C

Throttle and Shut-Off Valve ▪ Type DV (In-Line Assembly)

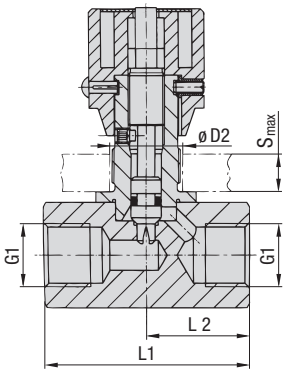

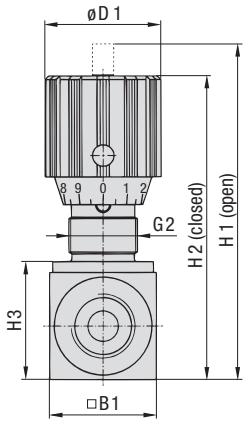

Characteristics

Throttle and shut-off the flow of liquid media in both directions

Features

- Designed for in-line assembly with female BSP, NPT and SAE threaded connections
- Panel mounting nuts available on request
- Graduated turning knob and coded spindle to accurately control flow
- Set-screw located on side of turning knob to lock valve in position

Media Compatibility

- Suitable for hydraulic fluids

Please contact STAUFF before using with other media.

Materials

- Body and spindle made of Steel (1.0715), zinc/iron-plated (Fe/Zn Fe Co 8 C) and free of hexavalent chromium CrVI (standard option); Stainless Steel (1.4571) version available
- Turning knob made of Polyamide (PA)
- O-rings made of NBR (Buna-N®); FKM (Viton®) and EPDM sealed version available

Contact STAUFF for alternative materials.

Technical Data

- Maximum working pressure: 350 bar / 5000 PSI (for all sizes)
- Operating temperature range: -20 °C ... +100 °C / -4 °F ... +212 °F

Please see page 100 for detailed flow characteristics.

Dimensions

Type + Nominal Size	Thread Options G1	Dimensions (mm/in) G2	H1	H2	H3	B1	ØD1	ØD2	S (Max.)	L1	L2	Weight (kg/lbs)
DV-06	G1/8 BSP 1/8 NPT	PG 7	64	59	18	16	24	13	4	38	19	0,12
			2.52	2.32	.71	.63	.94	.51	.16	1.50	.75	.26
DV-08	G1/4 BSP 1/4 NPT 7/16–20 UNF (1/4" SAE)	PG 11	83,5	77,5	27	25	29	19	7	48	24	0,25
			3.29	3.05	1.06	.98	1.14	.75	.28	1.89	.94	.55
DV-10	G3/8 BSP 3/8 NPT 9/16–18 UNF (3/8" SAE)	PG 11	90	83	32	30	29	19	7	58	29	0,40
			3.54	3.27	1.26	1.18	1.14	.75	.28	2.28	1.14	.88
DV-12	G1/2 BSP 1/2 NPT 3/4–16 UNF (1/2" SAE)	PG 16	109,5	99,5	38,5	35	38	23	7	68	34	0,60
			4.31	3.92	1.51	1.38	1.50	.91	.28	2.68	1.34	1.32
DV-16	G3/4 BSP 3/4 NPT 1-1/16–12 UN (3/4" SAE)	PG 16	128,5	118,5	48,5	45	38	23	7	78	39	1,10
			5.06	4.67	1.90	1.77	1.50	.91	.28	3.07	1.54	2.43
DV-20	G1 BSP 1 NPT 1-5/16–12 UN (1" SAE)	PG 29	159	146	55	50	49	38	10	108	54	2,40
			6.26	5.75	2.17	1.97	1.93	1.50	.39	4.25	2.13	5.29
DV-25	G1-1/4 BSP 1-1/4 NPT 1-5/8–12 UN (1-1/4" SAE)	PG 29	169	156	65	60	49	38	10	108	54	2,80
			6.65	6.14	2.56	2.36	1.93	1.50	.39	4.25	2.13	6.17
DV-30	G1-1/2 BSP 1-1/2 NPT 1-7/8–12 UN (1-1/2" SAE)	PG 29	179	166	75	70	49	38	10	108	54	3,50
			7.04	6.54	2.95	2.76	1.93	1.50	.39	4.25	2.13	7.72
DV-40	G2 BSP 2 NPT 2-1/2–12 UN (2" SAE)	PG 29	199	186	95	90	49	38	10	120	60	6,30
			7.83	7.32	3.74	3.54	1.93	1.50	.39	4.72	2.36	13.89

Order Codes

DV - 25 - B - G - W5 - PM

① ② ③ ④ ⑤ ⑥

① Type

Throttle and Shut-Off Valve (In-Line Assembly)	**DV**

② Nominal Size DN

06	**08**	**10**	**12**	**16**	**20**	**25**	**30**	**40**

③ Sealing Material

NBR (Buna-N®) (standard option)	**B**
FKM (Viton®)	**V**
EPDM	**E**

④ Connection

Female BSP threads (ISO 228)	**G**
Female NPT threads (ANSI B1.20.1)	**N**
Female UN/UNF thread (SAE J514)	**U**

⑤ Body / Spindle Material

Steel, zinc/iron-plated (standard option)	**—**
Stainless Steel	**W5**

⑥ Panel Mounting Nut

Without panel mounting nut (standard option)	**—**
With panel mounting nut	**PM**

Flow Control Valve ▪ Type DRV (In-Line Assembly)

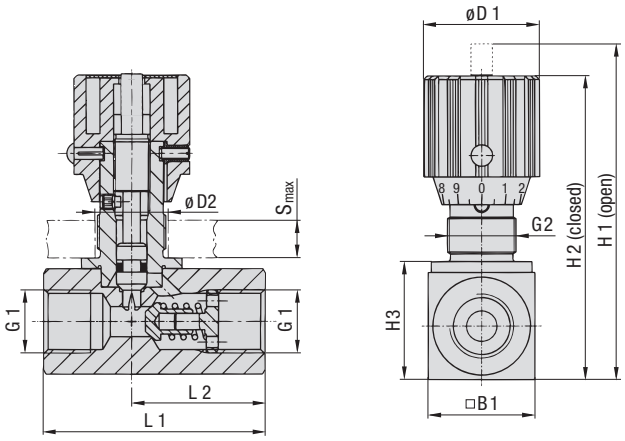

Dimensions

Type + Nominal Size	Thread Options G1	Dimensions (mm/in) G2	H1	H2	H3	B1	ØD1	ØD2	S (Max.)	L1	L2	Weight (kg/lbs)
DRV-06	G1/8 BSP 1/8 NPT	PG 7	64	59	18	16	24	13	4	45	26	0,10
			2.52	2.32	.71	.63	.94	.51	.16	1.77	1.02	.22
DRV-08	G1/4 BSP 1/4 NPT 7/16–20 UNF (1/4" SAE)	PG 11	83,5	77,5	27	25	29	19	7	55	33,5	0,30
			3.29	3.05	1.06	.98	1.14	.75	.28	2.17	1.32	.66
DRV-10	G3/8 BSP 3/8 NPT 9/16–18 UNF (3/8" SAE)	PG 11	90	83	32	30	29	19	7	65	41	0,45
			3.54	3.27	1.26	1.18	1.14	.75	.28	2.56	1.61	.99
DRV-12	G1/2 BSP 1/2 NPT 3/4–16 UNF (1/2" SAE)	PG 16	109,5	99,5	38,5	35	38	23	7	73	44	0,70
			4.31	3.92	1.51	1.38	1.50	.91	.28	2.87	1.73	1.54
DRV-16	G3/4 BSP 3/4 NPT 1-1/16–12 UN (3/4" SAE)	PG 16	128,5	118,5	48,5	45	38	23	7	88	57	1,26
			5.06	4.67	1.90	1.77	1.50	.91	.28	3.46	2.24	2.78
DRV-20	G1 BSP 1 NPT 1-5/16–12 UN (1" SAE)	PG 29	159	146	55	50	49	38	10	127	77	2,60
			6.26	5.75	2.17	1.97	1.93	1.50	.39	5.00	3.03	5.73
DRV-25	G1-1/4 BSP 1-1/4 NPT 1-5/8–12 UN (1-1/4" SAE)	PG 29	169	156	65	60	49	38	10	143	93	3,70
			6.65	6.14	2.56	2.36	1.93	1.50	.39	5.63	3.66	8.16
DRV-30	G1-1/2 BSP 1-1/2 NPT 1-7/8–12 UN (1-1/2" SAE)	PG 29	179	166	75	70	49	38	10	143	91	4,76
			7.04	6.54	2.95	2.76	1.93	1.50	.39	5.63	3.58	10.49
DRV-40	G2 BSP 2 NPT 2-1/2–12 UN (2" SAE)	PG 29	199	186	95	90	49	38	10	165	111	8,52
			7.83	7.32	3.74	3.54	1.93	1.50	.39	6.50	4.37	18.78

Order Codes

DRV - **25** - **B** - **G** - **W5** - **PM**

① ② ③ ④ ⑤ ⑥

① Type

Flow Control Valve (In-Line Assembly)	**DRV**

② Nominal Size DN

06	**08**	**10**	**12**	**16**	**20**	**25**	**30**	**40**

③ Sealing Material

NBR (Buna-N®) (standard option)	**B**
FKM (Viton®)	**V**
EPDM	**E**

④ Connection

Female BSP threads (ISO 228)	**G**
Female NPT threads (ANSI B1.20.1)	**N**
Female UN/UNF thread (SAE J514)	**U**

⑤ Body / Spindle Material

Steel, zinc/iron-plated (standard option)	**—**
Stainless Steel	**W5**

⑥ Panel Mounting Nut

Without panel mounting nut (standard option)	**—**
With panel mounting nut	**PM**

Characteristics

Throttle and shut-off the flow of liquid media in direction A-B (free flow in reverse direction)

Features

- Designed for in-line assembly with female BSP, NPT and SAE threaded connections
- Panel mounting nuts available on request
- Graduated turning knob and coded spindle to accurately control flow
- Set-screw located on side of turning knob to lock valve in position

Media Compatibility

- Suitable for hydraulic fluids

Please contact STAUFF before using with other media.

Materials

- Body and spindle made of Steel (1.0715), zinc/iron-plated (Fe/Zn Fe Co 8 C) and free of hexavalent chromium CrVI (standard option); Stainless Steel (1.4571) version available
- Turning knob made of Polyamide (PA)
- O-rings made of NBR (Buna-N®); FKM (Viton®) and EPDM sealed version available

Contact STAUFF for alternative materials.

Technical Data

- Opening pressure: 0,5 bar / 7 PSI (4,5 bar / 65 PSI available on request)
- Maximum working pressure: 350 bar / 5000 PSI (for all sizes)
- Operating temperature range: -20 °C ... +100 °C / -4 °F ... +212 °F

Please see page 100 for detailed flow characteristics.

C

Throttle and Shut-Off Valve ▪ Type DVP (Manifold Assembly)

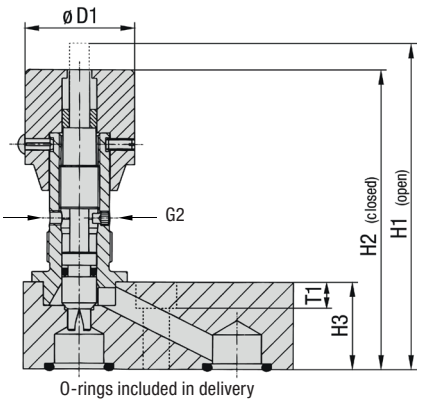

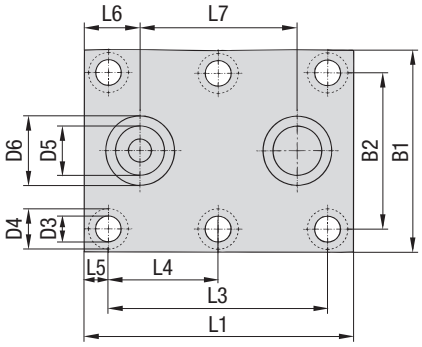

Characteristics

Throttle and shut-off the flow of liquid media in both directions

Features
- Designed for manifold mounting
- Panel mounting nuts available on request
- Graduated turning knob and coded spindle to accurately control flow
- Set-screw located on side of turning knob to lock valve in position

Media Compatibility
- Suitable for hydraulic fluids

Please contact STAUFF before using with other media.

Materials
- Body and spindle made of Steel (1.0715), zinc/iron-plated (Fe/Zn Fe Co 8 C) and free of hexavalent chromium CrVI (standard option); Stainless Steel (1.4571) version available
- Turning knob made of Polyamide (PA)
- O-rings made of FKM (Viton®); NBR (Buna-N®) and EPDM sealed version available

Contact STAUFF for alternative materials.

Technical Data
- Maximum working pressure: 350 bar / 5000 PSI (for all sizes)
- Operating temperature range: -20 °C ... +100 °C / -4 °F ... +212 °F

Please see page 100 for detailed flow characteristics.

Recommended Bolts / Tightening Torques
- Socket cap screws according to ISO 4762 or ANSI / ASME B18.3 recommended for installation (not included in delivery):

DVP-06	M6 x 20 - 8.8 (9 N·m) 1/4–20 UNC x 3/4 - Gr. 5 (10 ft·lb)
DVP-08	M6 x 25 - 8.8 (9 N·m) 1/4–20 UNC x 1 - Gr. 5 (10 ft·lb)
DVP-10	M6 x 30 - 10.9 (12 N·m) 1/4–20 UNC x 1-1/4 - Gr. 8 (12 ft·lb)
DVP-12	M6 x 30 - 12.9 (15 N·m) 1/4–20 UNC x 1-1/4 - Gr. 10 (14 ft·lb)
DVP-16	M8 x 35 - 10.9 (30 N·m) 5/16–18 UNC x 1-1/2 - Gr. 8 (24 ft·lb)
DVP-20	M8 x 50 - 12.9 (35 N·m) 5/16–18 UNC x 2 - Gr. 10 (29 ft·lb)
DVP-25	M10 x 50 - 12.9 (70 N·m) 3/8–16 UNC x 2 - Gr. 10 (58 ft·lb)
DVP-30	M12 x 60 - 10.9 (100 N·m) 7/16–14 UNC x 2-1/2 - Gr. 8 (63 ft·lb)

Dimensions

For panel mounting, please see dimensions G2, D2 and S (Max.) on page 92.

Type + Nom. Size	Dimensions (mm/in) G2	ØD1	ØD3	ØD4	ØD5	ØD6	L1	L3	L4	L5	L6	L7	B1	B2	T1	H1	H2	H3	O-ring	Weight (kg/lbs)
DVP-06	PG 7	24	6,5	10,5	5	9,8	35	19		8	9,5	16	41,5	28,5	6,8	64	59	16	6,35 x 1,78	0,20
		.94	.26	.41	.20	.39	1.38	.75		.31	.37	.63	1.63	1.12	.27	2.52	2.32	.63		.44
DVP-08	PG 11	29	6,5	10,5	7	12,4	47,5	35		6,5	11	25,5	46	33,5	6,8	79	72	20	8,5 x 2	0,40
		1.14	.26	.41	.28	.49	1.87	1.38		.26	.43	1.00	1.81	1.32	.27	3.11	2.83	.79		.88
DVP-10	PG 11	29	6,5	10,5	10	15,7	51	33,5		8,5	12,7	25,5	51	38	6,8	84	78	25	12 x 2	0,60
		1.14	.26	.41	.39	.62	2.01	1.32		.33	.50	1.00	2.01	1.50	.27	3.31	3.07	.98		1.32
DVP-12	PG 16	38	6,5	10,5	13	18,7	75	38		18,5	22,5	30	57,5	44,5	6,8	100	89	25	15 x 2	1,00
		1.50	.26	.41	.51	.74	2.95	1.50		.73	.89	1.18	2.26	1.75	.27	3.94	3.50	.98		2.20
DVP-16	PG 16	38	8,5	13,5	17	23,9	93,5	76	38	8,5	19,5	54	70	54	9	113	103	30	19 x 2,5	1,50
		1.50	.33	.53	.67	.94	3.68	2.99	1.50	.33	.77	2.13	2.76	2.13	.35	4.45	4.06	1.18		3.31
DVP-20	PG 29	49	8,5	13,5	22	30,5	111	95	47,5	8	27	57	76,5	60	9	154	142	45	25 x 3	3,40
		1.93	.33	.53	.87	1.20	4.37	3.74	1.87	.31	1.06	2.24	3.01	2.36	.35	6.06	5.59	1.77		7.50
DVP-25	PG 29	49	10,5	16,5	28,5	37,5	143	120	60	11	32	79,5	100	76	11	154	142	45	32 x 3	5,15
		1.93	.41	.65	1.12	1.48	5.63	4.72	2.36	.43	1.26	3.13	3.94	2.99	.43	6.06	5.59	1.77		11.35
DVP-30	PG 29	49	13	19	35	43,5	171	143	71,5	15	39	95	115	92	13	159	147	50	38 x 3	7,50
		1.93	.51	.75	1.38	1.71	6.73	5.63	2.81	.59	1.54	3.74	4.53	3.62	.51	6.26	5.79	1.97		16.53

Order Codes

DVP - 25 - V - W5 - PM

① ② ③ ④ ⑤

① Type

Throttle and Shut-Off Valve (Manifold Assembly)	**DVP**

② Nominal Size DN

06	**08**	**10**	**12**	**16**	**20**	**25**	**30**

③ Sealing Material

FKM (Viton®) (standard option)	**V**
NBR (Buna-N®)	**B**
EPDM	**E**

⑤ Body / Spindle Material

Steel, zinc/iron-plated (standard option)	**—**
Stainless Steel	**W5**

⑤ Panel Mounting Nut

Without panel mounting nut (standard option)	**—**
With panel mounting nut	**PM**

Flow Control Valve ▪ Type DRVP (Manifold Assembly)

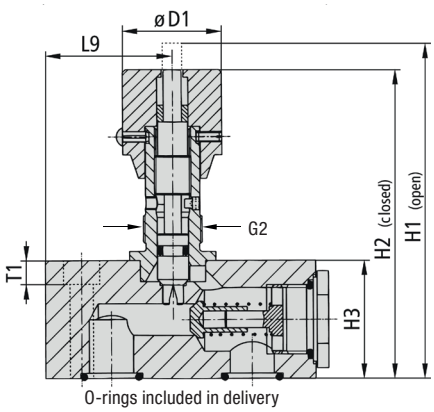

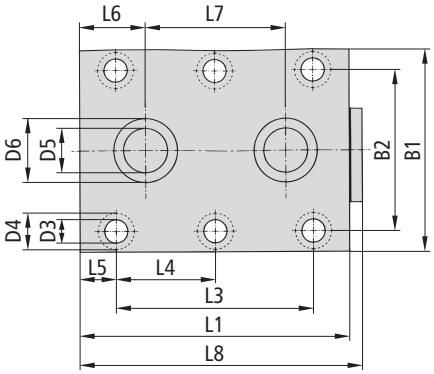

Dimensions

For panel mounting, please see dimensions G2, D2 and S (Max.) on page 93.

Type + Nom. Size	Dimensions (mm/in) G2	ØD1	ØD3	ØD4	ØD5	ØD6	L1	L3	L4	L5	L6	L7	L8	L9	B1	B2	T1	H1	H2	H3	O-Ring	Weight (kg/lbs)
DRVP-06	PG 7	24	6,5	10,5	5	9,8	41,5	19		6,4	8	16	47	13,5	41,5	28,5	6,8	64	59	16	6,35 x 1,78	0,26
		.94	.26	.41	.20	.39	1.63	.75		.25	.31	.63	1.85	.53	1.63	1.12	.27	2.52	2.32	.63		.57
DRVP-08	PG 11	29	6,5	10,5	7	12,4	63,5	35		14,2	18,7	25,5	70	31	46	33,5	6,8	79	72	20	8,5 x 2	0,50
		1.14	.26	.41	.28	.49	2.50	1.38		.56	.74	1.00	2.76	1.22	1.81	1.32	.27	3.11	2.83	.79		1.10
DRVP-10	PG 11	29	6,5	10,5	10	15,7	70	33,5		18	22,0	25,5	75	29,5	51	38	6,8	84	78	25	12 x 2	0,80
		1.14	.26	.41	.39	.62	2.76	1.32		.71	.87	1.00	2.95	1.16	2.01	1.50	.27	3.31	3.07	.98		1.76
DRVP-12	PG 16	38	6,5	10,5	13	18,7	80	38		21	25,0	30	86	36,5	57,5	44,5	6,8	107	96	32	15 x 2	1,20
		1.50	.26	.41	.51	.74	3.15	1.50		.83	.98	1.18	3.39	1.44	2.26	1.75	.27	4.21	3.78	1.26		2.65
DRVP-16	PG 16	38	8,5	13,5	17	23,9	104	76	38	14	25,4	54	110	49	70	54	9	128	118	45	19 x 2,5	2,50
		1.50	.33	.53	.67	.94	4.09	2.99	1.50	.55	1.00	2.13	4.33	1.93	2.76	2.13	.35	5.04	4.65	1.77		5.51
DRVP-20	PG 29	49	8,5	13,5	22	30,5	127	95	47,5	16	35	57	133	49	76,5	60	9	159	147	50	25 x 3	3,90
		1.93	.33	.53	.87	1.20	5.00	3.74	1.87	.63	1.38	2.24	5.24	1.93	3.01	2.36	.35	6.26	5.79	1.97		8.60
DRVP-25	PG 29	49	10,5	16,5	28,5	37,5	165	120	60	15	35,6	79,5	171	77	100	76	11	164	152	55	32 x 3	6,70
		1.93	.41	.65	1.12	1.48	6.50	4.72	2.36	.59	1.40	3.13	6.73	3.03	3.94	2.99	.43	6.46	5.98	2.17		14.77
DRVP-30	PG 29	49	13	19	35	43,5	186	143	71,5	15	38,8	95	192	85	115	92	13	184	172	75	38 x 3	11,00
		1.93	.51	.75	1.38	1.71	7.32	5.63	2.81	.59	1.53	3.74	7.56	3.35	4.53	3.62	.51	7.24	6.77	2.95		24.25
DRVP-40	PG 29	49	13	19	47,5	57,5	192	133,5	67,5	16	41,5	89	197	64	140	111	13	209	197	100	52 x 3	18,80
		1.93	.51	.75	1.87	2.26	7.56	5.25	2.66	.63	1.63	3.50	7.76	2.52	5.51	4.37	.51	8.23	7.76	3.94		41.45

Order Codes

DRVP - 25 - V - W5 - PM

① ② ③ ④ ⑤

① Type

Flow Control Valve (Manifold Assembly)	**DRVP**

② Nominal Size DN

06	08	10	12	16	20	25	30	40

③ Sealing Material

FKM (Viton®) (standard option)	**V**
NBR (Buna-N®)	**B**
EPDM	**E**

④ Body / Spindle Material

Steel, zinc/iron-plated (standard option)	**—**
Stainless Steel	**W5**

⑤ Panel Mounting Nut

Without panel mounting nut (standard option)	**—**
With panel mounting nut	**PM**

Characteristics

Throttle and shut-off the flow of liquid media in direction A-B (free flow in reverse direction)

Features

- Designed for manifold mounting
- Panel mounting nuts available on request
- Graduated turning knob and coded spindle to accurately control flow
- Set-screw located on side of turning knob to lock valve in position

Media Compatibility

- Suitable for hydraulic fluids

Please contact STAUFF before using with other media.

Materials

- Body and spindle made of Steel (1.0715), zinc/iron-plated (Fe/Zn Fe Co 8 C) and free of hexavalent chromium CrVI (standard option); Stainless Steel (1.4571) version available
- Turning knob made of Polyamide (PA)
- O-rings made of FKM (Viton®); NBR (Buna-N®) and EPDM sealed version available

Contact STAUFF for alternative materials.

Technical Data

- Opening pressure: 0,5 bar / 7 PSI (4,5 bar / 65 PSI available on request)
- Maximum working pressure: 350 bar / 5000 PSI (for all sizes)
- Operating temperature range: -20 °C ... +100 °C / -4 °F ... +212 °F

Please see page 100 for detailed flow characteristics.

Recommended Bolts / Tightening Torques

- Socket cap screws according to ISO 4762 or ANSI / ASME B18.3 recommended for installation (not included in delivery):

DRVP-06	M6 x 20 - 8.8 (9 N·m) 1/4–20 UNC x 3/4 - Gr. 5 (10 ft·lb)
DRVP-08	M6 x 25 - 8.8 (9 N·m) 1/4–20 UNC x 1 - Gr. 5 (10 ft·lb)
DRVP-10	M6 x 30 - 10.9 (12 N·m) 1/4–20 UNC x 1-1/4 - Gr. 8 (12 ft·lb)
DRVP-12	M6 x 35 - 12.9 (15 N·m) 1/4–20 UNC x 1-1/2 - Gr. 10 (14 ft·lb)
DRVP-16	M8 x 50 - 10.9 (30 N·m) 5/16–18 UNC x 2 - Gr. 8 (24 ft·lb)
DRVP-20	M8 x 55 - 12.9 (35 N·m) 5/16–18 UNC x 2-1/4 - Gr. 10 (29 ft·lb)
DRVP-25	M10 x 60 - 12.9 (70 N·m) 3/8–16 UNC x 2-1/2 - Gr. 10 (58 ft·lb)
DRVP-30	M12 x 85 - 10.9 (100 N·m) 7/16–14 x 3-1/2 - Gr. 8 (63 ft·lb)
DRVP-40	M12 x 100 - 12.9 (130 N·m) 7/16–14 x 4 - Gr. 10 (70 ft·lb)

C

Throttle and Shut-Off Valve ▪ Type DVE (Cartridge Assembly)

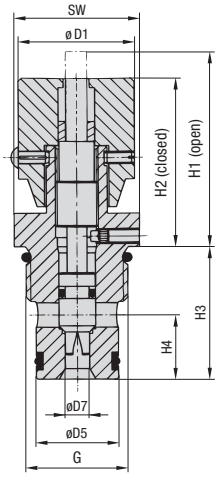

Installation Details

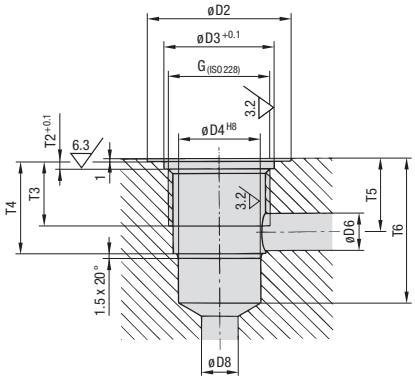

Characteristics

Throttle and shut-off the flow of liquid media in both directions

Features

- Designed for direct installation into hydraulic manifolds with male BSP threaded stud
- Graduated turning knob and coded spindle to accurately control flow
- Set-screw located on side of turning knob to lock valve in position

Media Compatibility

- Suitable for hydraulic fluids

Please contact STAUFF before using with other media.

Materials

- Body and spindle made of Steel (1.0715), zinc/iron-plated (Fe/Zn Fe Co 8 C) and free of hexavalent chromium CrVI (standard option); Stainless Steel (1.4571) version available
- Turning knob made of Polyamide (PA)
- O-rings made of NBR (Buna-N®); FKM (Viton®) and EPDM sealed version available

Contact STAUFF for alternative materials.

Technical Data

- Maximum working pressure: 350 bar / 5000 PSI (for all sizes)
- Operating temperature range: -20 °C ... +100 °C / -4 °F ... +212 °F

Please see page 100 for detailed flow characteristics.

Dimensions

Type + Nom. Size	Thread Options G	Dimensions (mm/in) H1	H2	H3	H4	ØD1	ØD2	ØD3	ØD4	ØD5	ØD6	ØD7	ØD8	SW	T2	T3	T4	T5	T6	Weight (kg/lbs)
DVE-08	G1/2 BSP	47	41	28	12,0	29	32	24	14	14	5	5	5	27	1,9	14	17,5	15	29	0,15
		1.85	1.61	1.08	.47	1.14	1.26	.94	.55	.55	.20	.20	.20	1.06	.07	.55	.69	.59	1.14	.33
DVE-10	G1/2 BSP	64	54	31	14,5	38	32	24	16	16	8	6	8	27	1,9	14	20,5	17	33	0,25
		2.52	2.13	1.21	.57	1.50	1.26	.94	.63	.63	.31	.24	.31	1.06	.07	.55	.81	.67	1.30	.55
DVE-12	G3/4 BSP	65	55	40	17,5	38	37	30	19	19	10	8	10	32	1,9	21	29,0	24	43	0,50
		2.56	2.17	1.57	.69	1.50	1.46	1.18	.75	.75	.39	.31	.39	1.26	.07	.83	1.14	.94	1.69	1.10
DVE-16	G1 BSP	65	55	44	21,1	38	47	36	27	27	12	8	12	41	1,9	21	30,0	24	47	0,70
		2.56	2.17	1.71	.83	1.50	1.85	1.42	1.06	1.06	.47	.31	.47	1.61	.07	.83	1.18	.94	1.85	1.54

Order Codes

DVE - 16 - B - B - W5

① ② ③ ④ ⑤

① Type

Throttle and Shut-Off Valve (Cartridge Assembly)	**DVE**

② Nominal Size DN

08	**10**	**12**	**16**

③ Sealing Material

NBR (Buna-N®) (standard option)	**B**
FKM (Viton®)	**V**
EPDM	**E**

④ Connection

Male BSP thread (ISO 228)	**B**

⑤ Body / Spindle Material

Steel, zinc/iron-plated (standard option)	**—**
Stainless Steel	**W5**

Dimensional drawings: All dimensions in mm only.

Pressure Compensated Flow Control Valve ▪ Type PNDRV (In-Line Assembly)

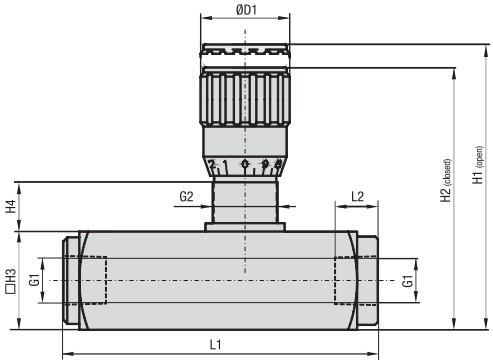

Dimensions

Type + Nominal Size	Thread Options G1	Dimensions (mm/in) L1	L2	H1	H2	H3	H4	G2	Weight (kg/lbs)
PNDRV-08	G1/4 BSP	94	12,5	88,5	81,5	30	15	M20 x 1	0,58
	1/4 NPT								
	7/16–20 UNF (1/4" SAE)	3.70	.49	3.48	3.21	1.18	.59		.77
PNDRV-10	G3/8 BSP	110,5	13	103	94,5	35	17	M25 x 1,5	0,94
	3/8 NPT								
	9/16–18 UNF (3/8" SAE)	4.35	.51	4.06	3.72	1.38	.67		2.09
PNDRV-12	G1/2 BSP	137	15,5	122	112	45	18	M30 x 1,5*	1,83
	1/2 NPT								
	3/4–16 UNF (1/2" SAE)	5.39	.61	4.80	4.41	1.77	.71		4.07
PNDRV-16	3/4 NPT	163	17	150	138	55	24	M40 x 1,5	3,35
	G3/4 BSP								
	1-1/16–12 UN (3/4" SAE)	6.42	.67	5.91	5.43	2.17	.94		7.44

* M25 x 1,5 for version with female UN/UNF thread (SAE J514)

Order Codes

PNDRV - 12 - B - G - W5 - PM

① ② ③ ④ ⑤ ⑥

① Type

Pressure Compensated Flow Control Valve (In-Line Assembly)	**PNDRV**

② Nominal Size DN

08	**10**	**12**	**16**

③ Sealing Material

NBR (Buna-N®) (standard option)	**B**
FKM (Viton®)	**V**

④ Connection

Female BSP thread (ISO 228)	**G**
Female NPT thread (ANSI B1.20.1)	**N**
Female UN/UNF thread (SAE J514)	**U**

⑤ Body Material

Steel, phosphated (standard option)	**—**
Stainless Steel	**W5**

⑥ Panel Mounting Nut

Without panel mounting nut (standard option)	**—**
With panel mounting nut	**PM**

Characteristics

Throttle and shut-off the flow of liquid media in direction A-B (free flow in reverse direction) with pressure compensating feature via built-in compensating piston

Features

- Designed for in-line assembly with female BSP, NPT and SAE threaded connections
- Panel mounting nuts available on request
- Graduated turning knob to accurately control flow
- Set-screw located on side of turning knob to lock valve in position

Media Compatibility

- Suitable for hydraulic fluids

Please contact STAUFF before using with other media.

Materials

- Body made of Steel, phosphated
- Internal components made of Stainless Steel
- Turning knob made of Aluminium
- O-rings made of NBR (Buna-N®)
- Anti-extrusion ring made of PTFE

Contact STAUFF for alternative materials.

Technical Data

- Maximum working pressure: 210 bar / 3000 PSI (for all sizes)
- Operating temperature range: -20 °C ... +120 °C / -4 °F ... +248 °F
- Minimum filtration grade: 25 µm (absolute) to ensure the correct functioning, reduce wear and tear and increase the service life of the valve

Flow Characteristics

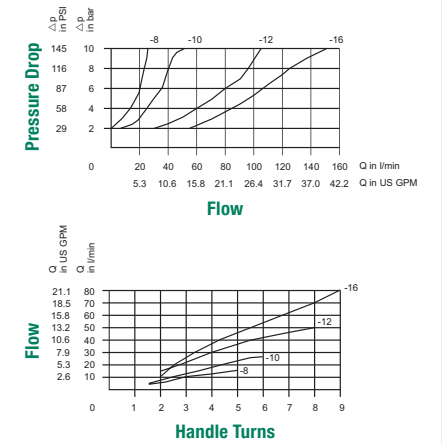

C

Heavy-Duty Check Valve ▪ Type RV (In-Line Assembly)

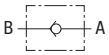

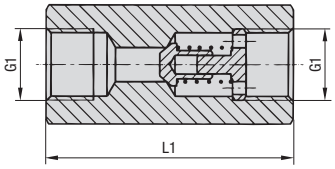

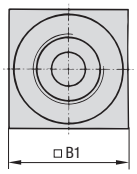

Characteristics

Allows a single-directional flow only

Features
- Designed for in-line assembly with female BSP, NPT and SAE threaded connections
- Metal-to-metal seat

Media Compatibility
- Suitable for hydraulic fluids

Please contact STAUFF before using with other media.

Materials
- Body made of Steel (1.0715), zinc/iron-plated (Fe/Zn Fe Co 8 C) and free of hexavalent chromium CrVI (standard option); Stainless Steel (1.4571) version available

Technical Data
- Opening pressure: 0,5 bar / 7 PSI (4,5 bar / 65 PSI available on request)
- Maximum working pressure: 500 bar / 7250 PSI (depending on size)
- Operating temperature range: -20 °C ... +100 °C / -4 °F ... +212 °F

Please see page 100 for detailed flow characteristics.

Dimensions

Typ + Nominal Size	Thread Options G1	Dimensions (mm/in) L1 only BSP / NPT	L1 only SAE	B1	Working Pressure PN (bar/PSI) Carbon Steel	Stainless Steel	Weight (kg/lbs)
RV-06	G1/8 BSP 1/8 NPT	45		16	500	350	0,10
		1.77		.63	7250	5076	.22
RV-08	G1/4 BSP 1/4 NPT 7/16–20 UNF (1/4" SAE)	55	54,5	25	500	350	0,20
		2.17	2.15	.98	7250	5076	.44
RV-10	G3/8 BSP 3/8 NPT 9/16–18 UNF (3/8" SAE)	65	65	30	500	350	0,40
		2.56	2.56	1.18	7250	5076	.88
RV-12	G1/2 BSP 1/2 NPT 3/4–16 UNF (1/2" SAE)	73	73	35	500	350	0,70
		2.87	2.87	1.38	7250	5076	1.54
RV-16	G3/4 BSP 3/4 NPT 1-1/16–12 UN (3/4" SAE)	88	97,5	45	500	350	1,20
		3.46	3.84	1.77	7250	5076	2.64
RV-20	G1 BSP 1 NPT 1-5/16–12 UN (1" SAE)	127	127,5	50	500	350	2,00
		5.00	5.02	1.97	7250	5076	4.40
RV-25	G1-1/4 BSP 1-1/4 NPT 1-5/8–12 UN (1-1/4" SAE)	143	141,5	60	400	350	3,30
		5.63	5.57	2.36	5800	5076	7.26
RV-30	G1-1/2 BSP 1-1/2 NPT 1-7/8–12 UN (1-1/2" SAE)	143	139,5	70	350	350	4,20
		5.63	54.92	2.75	5000	5076	9.24
RV-40	G2 BSP 2 NPT 2-1/2–12 UN (2" SAE)	165	165	90	350	350	7,20
		6.49	6.50	3.54	5000	5076	15.84

Order Codes

RV - 25 - B0.5 - G - W5

① ② ③ ④ ⑤

① Type
Heavy-Duty Check Valve (In-Line Assembly)	**RV**

② Nominal Size DN
06	**08**	**10**	**12**	**16**	**20**	**25**	**30**	**40**

③ Opening Pressure
0,5 bar / 7 PSI (standard option)	**B0.5**
4,5 bar / 65 PSI	**B4.5**

Contact STAUFF for alternative opening pressures.

④ Connection
Female BSP thread (ISO 228)	**G**
Female NPT thread (ANSI B1.20.1)	**N**
Female UN/UNF thread (SAE J514)	**U**

⑤ Body Material
Steel, zinc/iron-plated (standard option)	**—**
Stainless Steel	**W5**

Medium-Duty Check Valve ▪ Type RVM (In-Line Assembly)

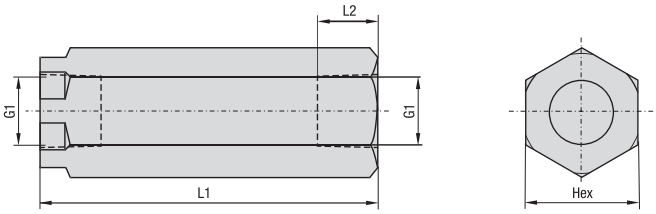

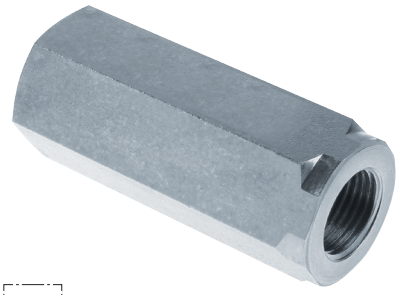

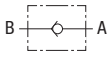

Dimensions

Type + Nominal Size	Thread Options G1	Dimensions (mm/in) L1	L2	Hex	Working Pressure PN (bar/PSI)	Weight (kg/lbs)
RVM-08	G1/4 BSP 1/4 NPT	63,0	12,5	22	400	0,17
		2.48	.49	.87	5800	.38
RVM-10	G3/8 BSP 3/8 NPT	69,0	12,5	27	400	0,26
		2.72	.49	1.06	5800	.58
RVM-12	G1/2 BSP 1/2 NPT	80,5	15,5	32	400	0,42
		3.17	.61	1.26	5800	.93
RVM-16	G3/4 BSP 3/4 NPT	99,5	17,0	36	400	0,61
		3.92	.67	1.42	5800	1.36

Order Codes

RVM - 12 - B0.5 - G

① ② ③ ④

① Type

Medium-Duty Check Valve (In-Line Assembly)	**RVM**

② Nominal Size DN

08	**10**	**12**	**16**

③ Opening Pressure

0,5 bar / 7 PSI (standard option)	**B0.5**
2 bar / 30 PSI	**B2.0**
4 bar / 60 PSI	**B4.0**

Contact STAUFF for alternative opening pressures.

④ Connection

Female BSP thread (ISO 228)	**G**
Female NPT thread (ANSI B1.20.1)	**N**

Characteristics

Allows a single-directional flow only

Features

- Designed for in-line assembly with female BSP and NPT threaded connections
- Ideal for medium-duty applications
- Metal-to-metal seat

Media Compatibility

- Suitable for hydraulic fluids

Please contact STAUFF before using with other media.

Materials

- Body made of Steel, zinc-plated
- Ball made of Stainless Steel

Technical Data

- Opening pressure: 0,5 bar / 7 PSI
- Field replaceable springs with a pressure setting of 2 bar / 30 PSI or 4 bar / 60 PSI
- Maximum working pressure: 400 bar / 5800 PSI (for all sizes)
- Operating temperature range: -20 °C ... +100 °C / -4 °F ... +212 °F

Flow Characteristics

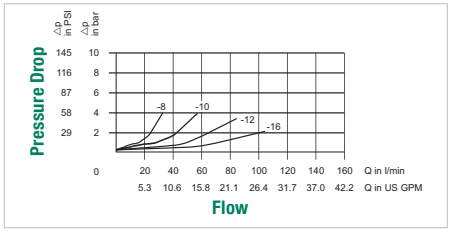

Contact STAUFF for alternative pressure settings.

C

Flow Characteristics

DV[4]
DRV[1, 3]
DVP[4]
DRVP[1, 3]
DVE[4]

DN 06

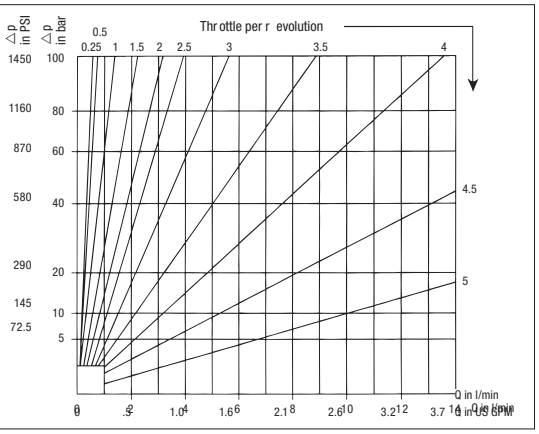

DV[4]
DRV[1, 3]
DVP[4]
DRVP[1, 3]
DVE[4]

DN 08

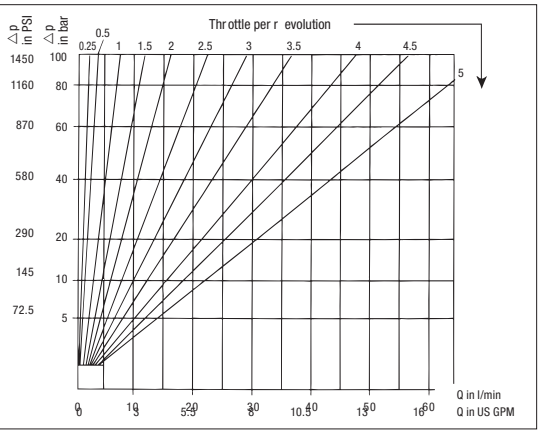

DV[4]
DRV[1, 3]
DVP[4]
DRVP[1, 3]
DVE[4]

DN 10

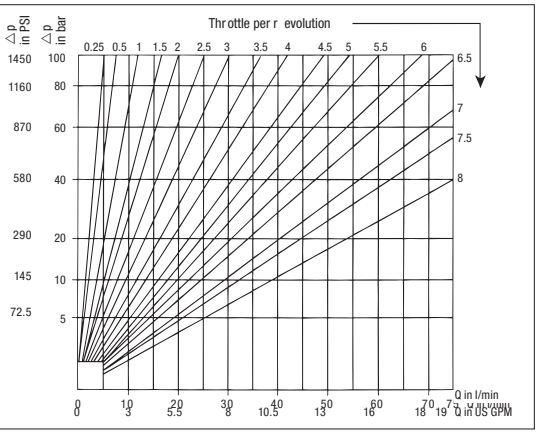

DV[4]
DRV[1, 3]
DVP[4]
DRVP[1, 3]
DVE[4]

DN 12

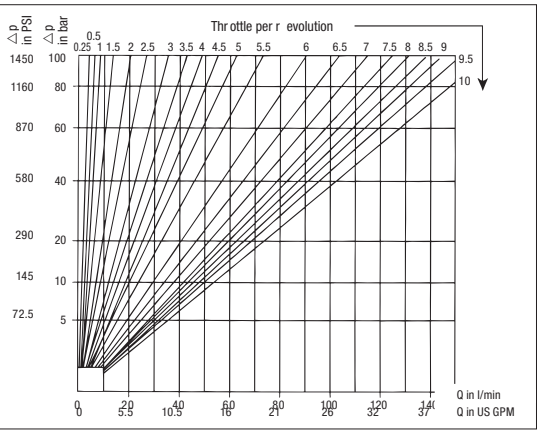

DV[4]
DRV[1, 3]
DVP[4]
DRVP[1, 3]
DVE[4]

DN 16

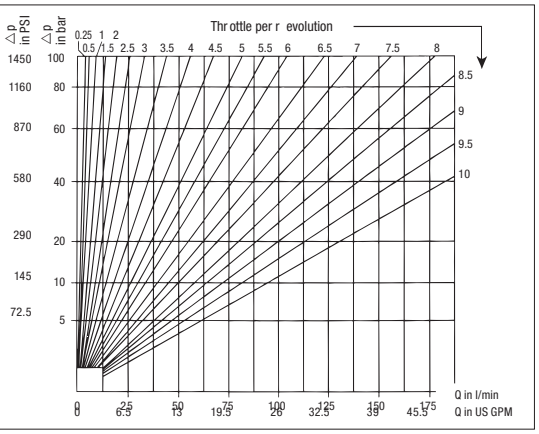

DV[4]
DRV[1, 3]
DVP[4]
DRVP[1, 3]
DVE[4]

DN 20-40

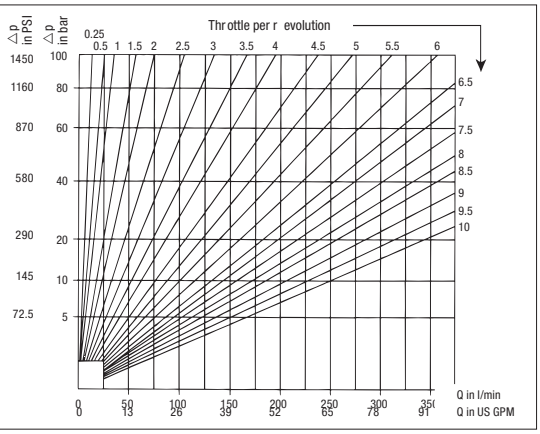

DRV[1,3]
DRVP[1, 3]
RV[1,2]

DN 06-40

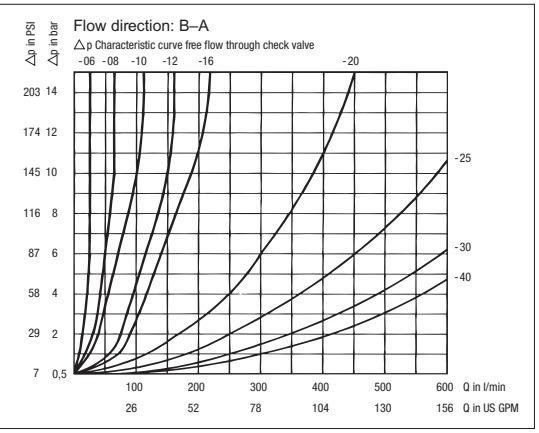

Please note:

The flow characteristics displayed on this page are valid for mineral oils with a density of 0,86 kg/dm^3 and the kinematic viscosity of 35 mm^2/s (35 cSt).

The characteristics have been determined in accordance to ISO 3968.

[1]Due to spring and manufacturing tolerances cracking pressures may deviate by ± 30%

[2]Leakage rate of check valve DIN EN 12266 - leakage rate C-D (test medium water)

[3]Flow control valves should not be used as shut-off device. Small leakage rates may occur in fully closed position. (DIN EN 12266 - leakage rate A-B - test medium water) Leakage rate of check valve - DIN EN 12266 - leakage rate C-D

[4]Flow control valves should not be used as shut-off device. Small leakage rates may occur in fully closed position. (DIN EN 12266 - leakage rate A-B - test medium water)

Gauge Isolator Valve
(Single Station)
SWS-S1 — 104

Gauge Isolator Valve
(Multi Station)
SWS-M — 104

Gauge Isolator Needle Valve
(Single Station)
SWS-A1 — 105

Gauge Isolator Needle Valve
(Single Station)
SWS-A2 — 105

D

D

Gauge Isolator Valve ▪ Type SWS-S1 (Single Station)

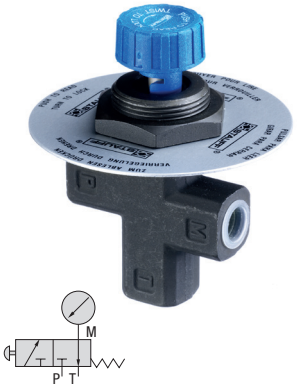

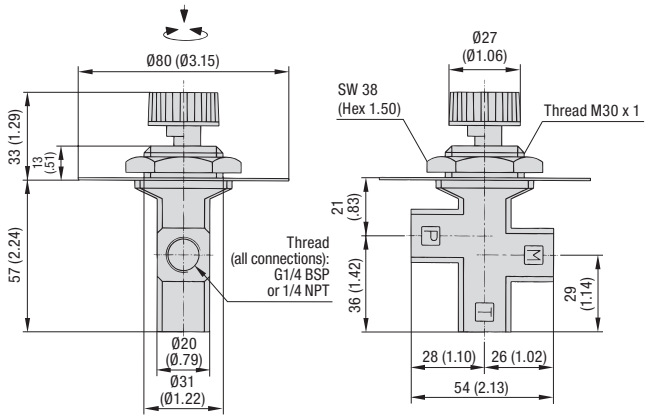

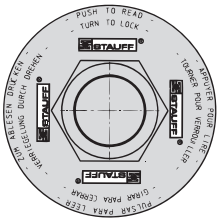

Characteristics

Effective protection of pressure gauges against overload caused by pressure peaks

Features
- Suitable for panel installation
- Max. panel thickness of 5 mm / .20 in
- Fixed with hexagonal nut
- Push button to read and turn to lock
- Multilingual instructions printed on face plate

Media Compatibility
- Suitable for hydraulic fluids

Please contact STAUFF before using with other media.

Materials
- Body made of Cast Iron
- Spindle made of Steel
- Push / turn button made of Polyamide (PA)
- Face plate made of Aluminium
- O-rings made of NBR (Buna-N®)

Technical Data
- Maximum working pressure: 400 bar / 5800 PSI
- Operating temperature range: -30 °C ... +115 °C / -22 °F ... +239 °F

Order Codes

SWS - **S1** - **G04**

① ② ③

① Type

Gauge Isolator Valve	**SWS**

② Style

Single station	**S1**

③ Connection Thread

Female G1/4 BSP (for all connections)	**G04**
Female 1/4 NPT (for all connections)	**N04**

Gauge Isolator Valve ▪ Type SWS-M (Multi Station)

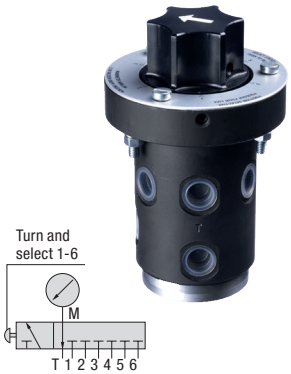

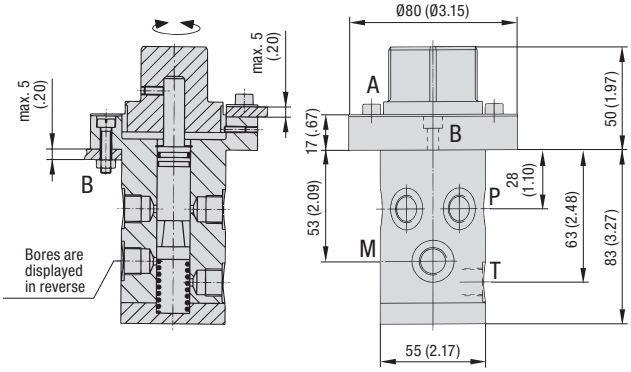

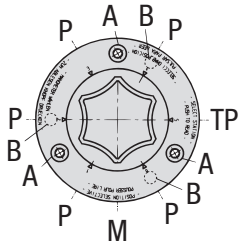

Mounting Bores (ø6 mm / .24 in)
- **A** 3 bores, equally spaced (120°), BCD ø65 mm / 2.56 in
- **B** 3 bores, equally spaced (120°), BCD ø65 mm / 2.56 in

Connections (G1/4 BSP or 7/16–20 UNF)
- **P** 6 bores, equally spaced (60°)
- **M** 1 bore
- **T** 1 bore

Characteristics

Pressure measurement on six positions in the hydraulic circuit with only one pressure gauge

Features
- Suitable for bulkhead installation
- Max. panel thickness of 5 mm / .20 in
- Fixed with connection flange and screws: 3 hexagon head bolts M5 x 10 (DIN 933) for mounting the printed panel and 3 socket cap screws M5 x 25 (DIN 912) with washers (DIN 127) and nut (DIN 934) for panel installation included in delivery
- Turn button to select position of measurement
- Multilingual instructions printed on panel

Media Compatibility
- Suitable for hydraulic fluids

Please contact STAUFF before using with other media.

Materials
- Body made of Cast Iron
- Spindle made of Steel
- Push / turn button made of Polyamide (PA)
- Face plate and end cover made of Aluminium
- O-rings made of NBR (Buna-N®)

Technical Data
- Maximum working pressure: 400 bar / 5800 PSI
- Operating temperature range: -30 °C ... +115 °C / -22 °F ... +239 °F

Note:
All thread protection plugs must be removed before use. Unused connection threads P must be sealed tightly with a suitable screw plug (e.g. DIN 908). Screw plugs are not included in the scope of delivery.

Order Codes

SWS - **M** - **G04**

① ② ③

① Type

Gauge Isolator Valve	**SWS**

② Style

Multi station	**M**

③ Connection Thread

Female G1/4 BSP for all connections	**G04**
Female 7/16–20 UNF (1/4" SAE) for all connections	**U04**

Gauge Isolator Needle Valve ▪ Types SWS-A1/A2 (Single Station)

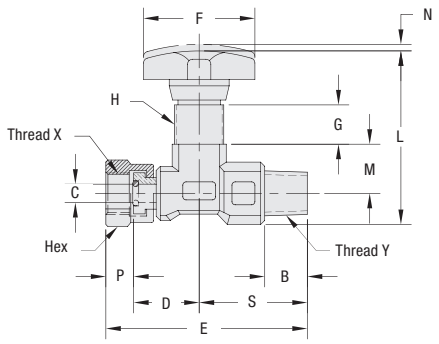

In-Line Version

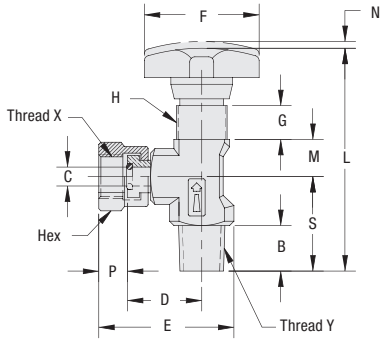

90° Version

D

Dimensions

Type	Thread X (Female)	Thread Y (Male)	Dimensions (mm/in) B	C	D	E	F	G	H	L	M	N	P	S	Hex	Weight (kg/lbs)
SWS-A1	G1/4 BSP 1/4 NPT	1/4 BSPT 1/4 NPT	13	5,6	20	61,5	34	12	M15 x 1	53	15	2	8,5	33	18	0,13
			.51	.22	.78	2.42	1.34	.47		2.09	.59	.08	.33	1.30	.71	.22
SWS-A2	G1/4 BSP 1/4 NPT	1/4 BSPT 1/4 NPT	13,5	5,6	22	40	34	10	M15 x 1	66	11	2	8,5	28	18	0,11
			.53	.22	.87	1.57	1.34	.39		2.60	.43	.08	.33	1.10	.71	.44

Order Codes

SWS - **A1** - **G04/B04** - **PM**

① ② ③ ④

① Type

Gauge Isolator Valve	**SWS**

② Style

Single station, in-line version	**A1**
Single station, 90° version	**A2**

③ Connection Threads

Female G1/4 BSP and Male 1/4 BSPT	**G04/B04**
Female 1/4 NPT and Male 1/4 NPT	**N04F/N04M**

④ Panel Mounting Kit

Without panel mounting kit (standard option)	**—**
With panel mounting kit	**PM**

Characteristics

Effective protection of pressure gauges against overload caused by pressure peaks

Features

- Designed for in-line assembly (type A1) or 90° assembly (type A2) with female BSP / male BSPT or female NPT / male NPT threaded connections
- Panel mounting nuts available on request
- Rotating swivel nut allows for accurate orientation of the pressure gauge

Materials

- Body made of Steel, zinc-plated
- Spindle made of Steel
- Hand-wheel made of Polyamide (PA)
- O-rings made of NBR (Buna-N®)
- Anti-extrusion ring made of PTFE

Contact STAUFF for alternative materials.

Technical Data

- Maximum working pressure: 400 bar / 5800 PSI (for all sizes)
- Operating temperature range: -20 °C ... +100 °C / -4 °F ... +212 °F

Materials in Scene
Material Library
HP LP2065

Highest-Pressure Ball Valves	108
High-Temperature Ball Valves	108
Ball Valves for Gas Applications	109
Ball Valves for Paints and Lacquers	110
Ball Valves for Isocyanates	110
Ball Valves with Fire-Safe Approval	111
Ball Valves For Steel Mill Applications	111

Highest-Pressure Ball Valves

800 bar / 1200 PSI ball valve combination for alternating pressure demands from 6 bar / 87 PSI up to 800 bar / 12000 PSI working in a hose testing plant.

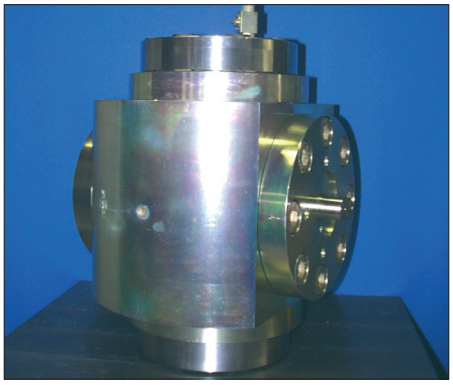

Ball valve for a test bed: The customers demand was to apply high pressure and great volume to the specimen in a short time.

Descaling of steel sheets and profiles.

E

The STAUFF range of valves have stood the test of time for ultra high pressure applications up to 800 bar / 12000 PSI.

The high demands on ball valves will be maintained through the utilisation of high quality STAUFF specified materials. The extreme loads on the seals caused by the high pressures will be absorbed by a special chambering of the seals. Additionally the sealing system is protected against erosion and therefore rapid wear.

The ball valves are utilised in Test Stations, Steel Works, Cleaning and Cutting Systems.

These valves are being utilised:

For High pressure water blasting
- internal cleaning of reactors, containers and mixers
- sewer cleaning
- pipe cleaning
- surface treatment like chamfering, descaling, varnish removal

For process and industrial technology
- CO2 – extraction
- hydroforming
- test bed technology
- water jet cutting systems

High-Temperature Ball Valves

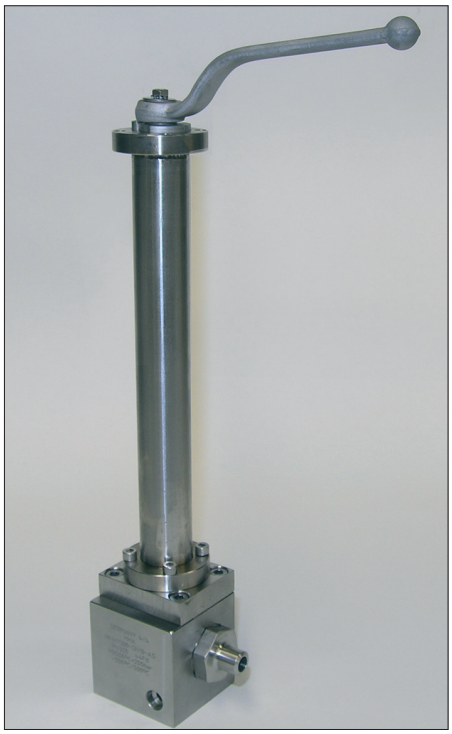

High temperature ball valves with heating elements for polymer production.

In order to provide the many advantages of ball valves in high temperature applications, STAUFF has developed the FBVT series of ball valves.

These valves are designed with a gland packing of special material. This sealing allows applications with high pressure and simultaneously high temperatures.

Up to a temperature of +260 °C / +500 °F high quality plastic seats are being utilised. These are suitable for high pressure and temperature loads due to their proven chambering.

For temperatures up to +500 °C / +932 °F STAUFF has developed a special sealing system with metal seats. Despite the additional demands on compression, wear and corrosion under high temperatures, the leak rate of these ball valves can be compared with standard valves.

Ball Valves for Gas Applications

STAUFF ball valves are used for many gas applications, such as:

- General gas supply systems,
- Filling plants,
- compressor stations,
- gas stations,
- analysis equipment

The design follows the Pressure Equipment Directive 97/23/EC.

The ATEX Directive for hazardous location EX II 2G c will be proved in single test on demand.

The materials for body, ball and seals are dependant on the gas and application in consideration of the directives.

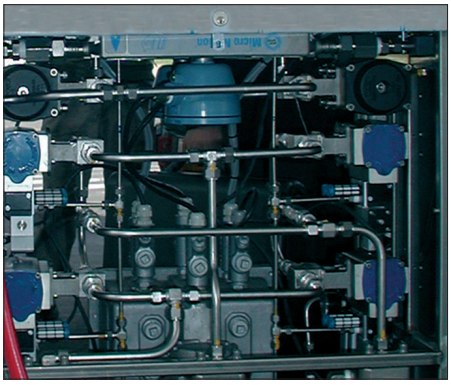

Ball valves with pneumatic actuator in gas stations.

E

DN	PN (bar)	Approved Material Combinations (Materials: Body / Ball + Stem / Ball Seat / O-Rings) for Gas Applications	for Hazardous Location EXII 2G c (ATEX)	Ball Valve Type
6 - 25	16	Steel / Steel / Delrin® (POM) / NBR (Buna-N®) Steel / Steel / Delrin® (POM) with Erosion Protection Ring / NBR (Buna-N®)	Steel / Steel / PEEK with ATEX Approval / NBR (Buna-N®) Steel / Steel / Delrin® (POM) with ATEX Approval / NBR (Buna-N®)	**BBV**
32 - 50	16	Steel / Steel / Delrin® (POM) / NBR (Buna-N®) Steel / Steel / Delrin® (POM) with Erosion Protection Ring / NBR (Buna-N®)	Steel / Steel / PEEK with ATEX Approval / NBR (Buna-N®)	**FBV**
6 - 25	500 315*	Steel / Stainless Steel / Delrin® (POM) / NBR (Buna-N®) Stainless Steel / Stainless Steel / Delrin® (POM) with Erosion Protection Ring / NBR (Buna-N®)	Steel / Stainless Steel / PEEK with ATEX Approval / NBR (Buna-N®) Stainless Steel / Stainless Steel / PEEK with ATEX Approval / NBR (Buna-N®) Steel / Stainless Steel / Delrin® (POM) with ATEX Approval / NBR (Buna-N®) Stainless Steel / Stainless Steel / Delrin® (POM) with ATEX Approval / NBR (Buna-N®)	**BBV**
32 - 50	315*	Steel / Stainless Steel / Delrin® (POM) / NBR (Buna-N®) Stainless Steel / Stainless Steel / Delrin® (POM) with Erosion Protection Ring / NBR (Buna-N®)	Steel / Stainless Steel / PEEK with ATEX Approval / NBR (Buna-N®) Stainless Steel / Stainless Steel / PEEK with ATEX Approval / NBR (Buna-N®) Stainless Steel / Stainless Steel / Delrin® (POM) with ATEX Approval / NBR (Buna-N®)	**FBV**

* Pressure up to max. allowed nominal pressure of the ball valve

Further ball valves up to DN 200 with flange connector, as well as 3/2-way-selector ball valves, multi-way ball valves and ball valves for manifold mounting and cartridge ball valves are also available.

The requirements and tests are in accordance to DIN 3230 Part 5, test group PG1 or PG2, Material and test certificate DIN EN 10204-3.1, Certification to Pressure Equipment Directive 97/23/EC.

The leaking rate can be proved with a Helium leakage test device up to a leakage rate of 10^{-9} mbar x l/sec.

STAUFF recommends the use of the version with errosion protection ring in order to extend the lifetime of the seats look page 130.

Only if the most important parameters like pressure, medium, temperature, medium concentration and operation cycles are known the best or most suitable material combination and the most economical solution can be offered.

Except the general suggestions for the material combinations the chemical resistance and further directives are to be considered. For Fluids like oxygen, hydrogen, argon, helium and sour gas we request a contactation.

Sour gas application: For fluids with hydrogen sulphide (H2S) – parts ball valves can be delivered in accordance to the NACE Standard MR0175.

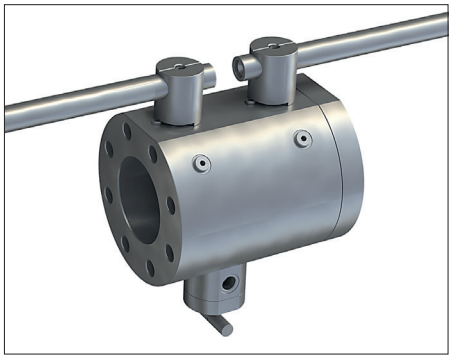

Double block and bleed valve for sampling.

Filter station for the filtration of gases with STAUFF 3-way-selector ball valves for 250 bar / 3600 PSI and +200°C / +392 °F.

Gas stations:
For gas pumps both ball valves with floating ball and with trunnion ball are suitable. Most important for the design are the frequency of operation cycles in use with actuators. Assembling of actuators to ISO 5211 or direct mounting.

Ball valves for analysis techniques and Sampling
Ball valves are deliverable as "double block and bleed valve". Part of this product range are the TALFIRE – ball valves. These ball valves meet the requirements of the TA-Luft (technical directive for clean air).
They are used in applications with air pollution substances.

In case of maintenance the gas flow is diverted by a 3-way-selector valve combination allowing the filter elements to be changed. Due to the excellent KV-value this valve is the ideal switch over unit for use in high leak-tightness application.

Ball Valves for Paints and Lacquers

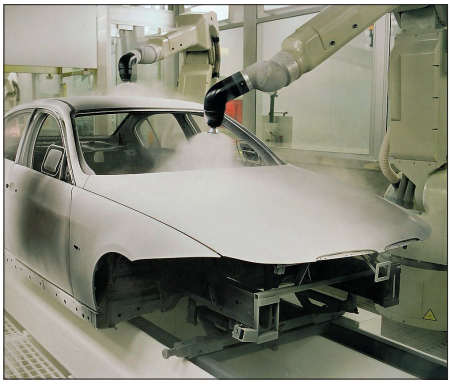

Ball valve application in airless spraying device.

E

Ball valves for paints and lacquers must be resistant against the varying viscosities and dye particles in the fluid.

The sealing material is the determining factor to guarantee an optimal lifetime. The choice of the seals is depending on the required operating cycles and after consideration of the pressure differential.
In case of operating the ball valve without differential pressure, standard ball seats can be used.

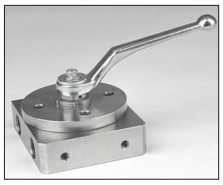

To increase the lifetime we recommend a seat version with erosion protection ring. For a further increase of the lifetime and also a reduction of repair and maintenance time, a metal seat is the best solution.

The specified material combinations are suitable for most applications.

The chemical resistance to the used solvent has to be tested when selecting the ball valve.

To maintain or repair the valve, it is necessary that the return and non-return lines in colour spraying plants can be blocked off.

Due to the opening of the bypass ball valve, an un-pressurised circulation has to be guaranteed.

The locking or opening of the bypass line is carried out manually, thereby incorrect operation is impossible.

Ball Valves for Isocyanates

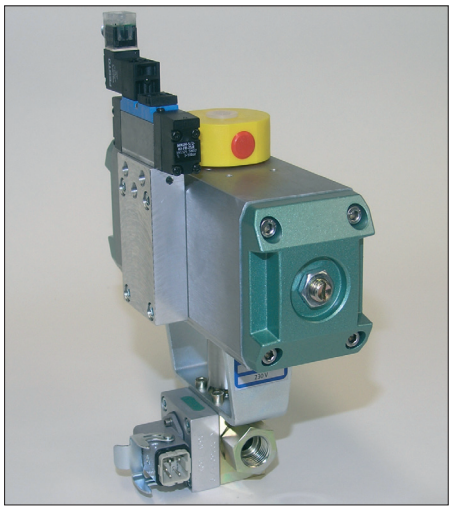

Isocyanates react with humidity and develop crystalline particles. To avoid that the isocyanates get in contact with environmental humidity, the ball valves have to be completely leakproof.

On the other hand the crystalline particles in the fluid mustn't damage the ball seats. Special seats are used because standard plastic seats can be damaged by crystalline particles.

With these sealing system from STAUFF a ball valve provides extended lifetime.

These valves are being used in the foaming systems and pasters. Ball valves are also available with heating devices and temperature sensors in order to keep the temperature regulated during the manufacturing process.

Equipped with actuators and limit switches STAUFF ball valves being operated in many instances by robots.

Ball Valves with Fire-Safe Approval

When handling flammable liquids safety must be a prime consideration. Great importance is therefore attributed to the design of "fire-safe" shut-off valves utilized in many industrial environments including:

This is most important for:

- Chemical Plants
- Petrochemical Plants
- Oil Drilling
- On-Shore and Off-Shore Installations
- Oil Refineries

When fire does break out, it is important that it does not spread through failures in pipe-work systems. Even under the most extreme conditions shut-off valves must provide:

- Secure Operation
- Reliable Sealing in shut-off position
- Reliable Sealing to the outside

Due to their quarter turn shut-off design, STAUFF ball valves provide a solution to meet these demands.

Metal seat edges at the ball seats guarantee the sealing function during and after contact with fire, even if the seals themselves are burnt.

In addition both housings and shafts are also sealed with heat resistant seats ensuring their continued operation.

The "fire-safe" test undergone by STAUFF ball valves subjected them to flames and a resulting temperature of +760 °C / +1400 °F where the ball valve is heated to a general temperature of min. +650 °C / +1202 °F.

The STAUFF "fire-safe" design ensured that after this burn period of 30 min. the valves remained operable and that a continued “emergency” sealing of the valve could be guaranteed.

The test conditions under which "fire-safe" requirements are specified are characterised in various international standards.

STAUFF ball valves of the BBV series have been tested successfully according to British Standard BS 6755 T.2, API 6 FA and ISO 10497. The tests were testified by the German TÜV Inspectorate.

At this time, certification as "fire-safe" relates to our BBV series with threaded connections and nominal sizes from DN 25 to DN 50 and the BBV series with flange connections and nominal sizes from DN 25 to DN 125 and within a nominal pressure range from 260 ... 420 bar / 3700 PSI ... PN 6000 PSI.

The material utilized for the soft seals in "fire-safe" valves remains dependant upon the required chemical resistance to suit the fluid, the application and operation conditions.

A wide variety of ball valve terminations are available from STAUFF to suit the individual applications or requirements and additionally other characteristics such as antistatic design can be incorporated within the STAUFF product.

Ball Valves For Steel Mill Applications

System Service Bleed Valve

Safe depressurization is a critical step in the maintenance of a hydraulic system. In many countries maintenance personnel are required to lock-out and tag hydraulic circuits before any maintenance work is carried out.

Assure that this process is carried out safely and properly during routine machine maintenance using the STAUFF System Service Bleed Valve.

The valve can only be locked and tagged-out in the closed position after the integrated bleed valve has been operated and the affected portion of the hydraulic system has been depressurized. The interlocking cam plates ensure the correct operating sequence.

Pressure Equalizing Ball Valve

Large, high pressure ball valves are difficult to open under pressure, especially when closed for a long period of time. Solutions to this problem have included multiple valves with bulky, external plumbing.

The STAUFF Pressure Equalizing Ball Valve adds an integrated valve mounted directly to the valve body and connected internally with no extra fittings or pipework.

Once the lockable bypass valve is opened pressure on both the upstream and downstream side of the main ball valve is equalized. This can reduce the torque required to operate the valve by up to 70%.

This also reduces the potential for damage to the valve caused by excessive breakaway torque.

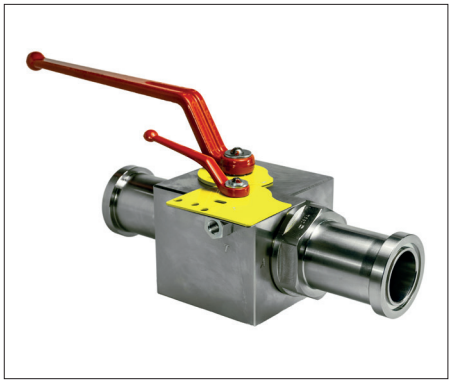

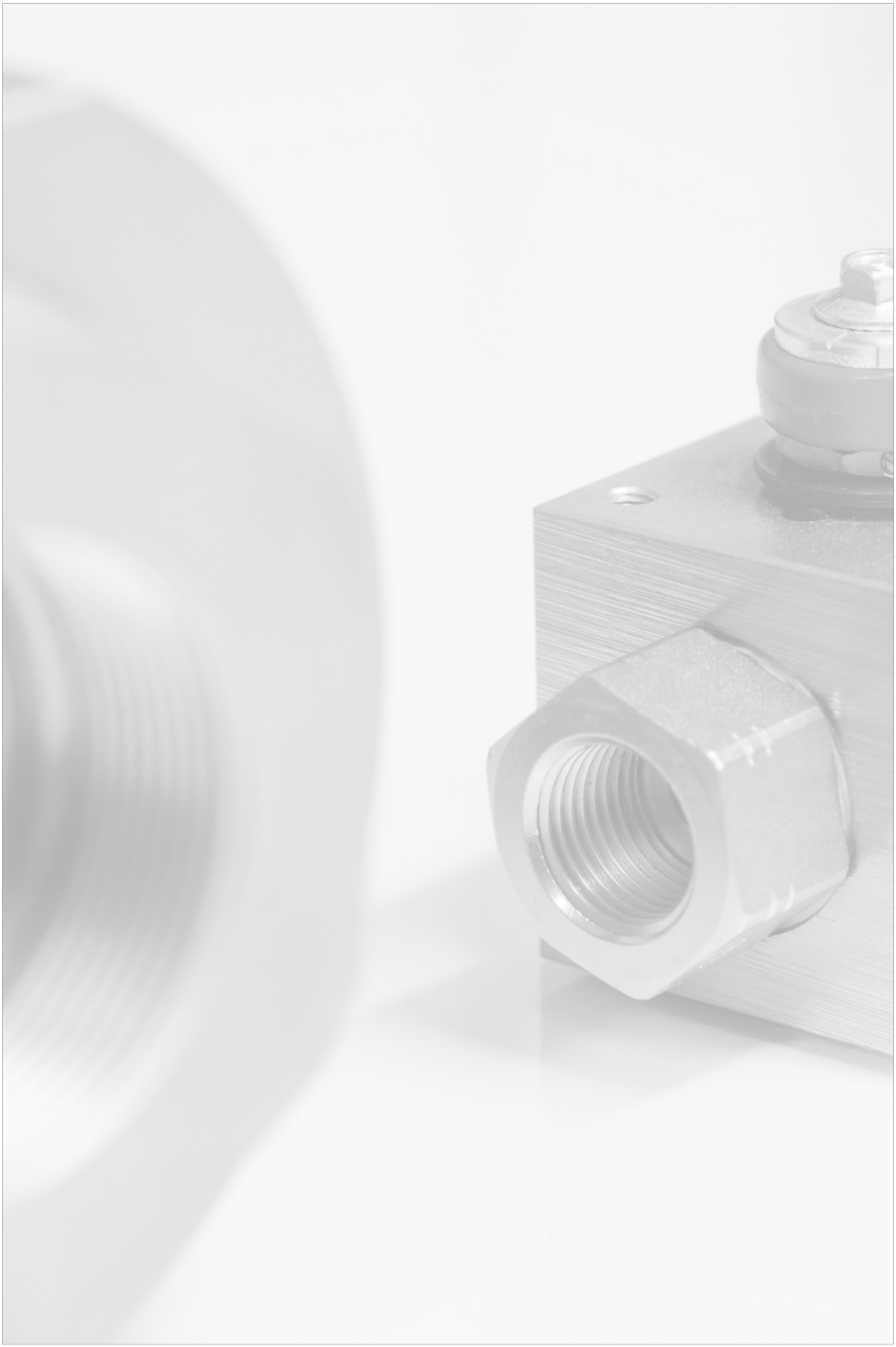

Levers	**114**
Locking Devices LD	**115-117**
Double-Acting Pneumatic Actuators AD	**118**
Single-Acting Pneumatic Actuators AS	**118**
Electric Actuators AE	**118**
Limit / Proximity Switches	**118**
Ball Valves with Detents DT	**119**
Ball Valves with Assembly Holes SM	**119**
Ball Valves with Assembly Threads PM	**119**
Standard / Alternative Porting Patterns	**120-121**

Levers

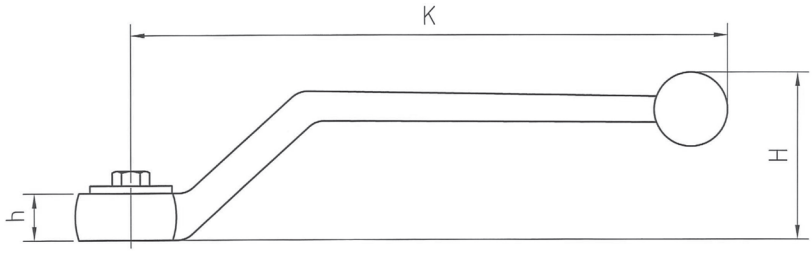

Zinc ▪ Off-Set Design

SW	Dimensions (mm/in) K	h	H	Weight (kg/lbs)	Order Codes
7	80	6,5	30	0,03	Lever-BV-SW07-ZNO
	3.15	.26	1.18	.07	
9	115	8,7	45	0,09	Lever-BV-SW09-ZNO
	4.52	.34	1.77	.20	

Carbon Steel ▪ Off-Set Design

SW	Dimensions (mm/in) K	h	H	Weight (kg/lbs)	Order Codes
7	80	6,5	30	0,05	Lever-BV-SW07-CSO
	3.15	.26	1.18	.11	
9	115	9	47	0,09	Lever-BV-SW09-CSO
	4.52	.35	1.85	.20	
14	170	12	64	0,23	Lever-BV-SW14-CSO
	6.73	.47	2.52	.51	
17	306	17	80	0,66	Lever-BV-SW17-CSO
	12.04	.69	3.15	1.45	

Stainless Steel V4A ▪ Off-Set Design

SW	Dimensions (mm/in) K	h	H	Weight (kg/lbs)	Order Codes
7	60	6,5	22	0,04	Lever-BV-SW07-W50
	2.36	.26	.87	.09	
9	115	9	47	0,10	Lever-BV-SW09-W50
	4.52	.35	1.85	.22	
14	173	12	64	0,23	Lever-BV-SW14-W50
	6.80	.47	2.52	.51	
17	227,5	15	90	0,66	SW17-W50
	8.96	.59	3.54	1.45	

F

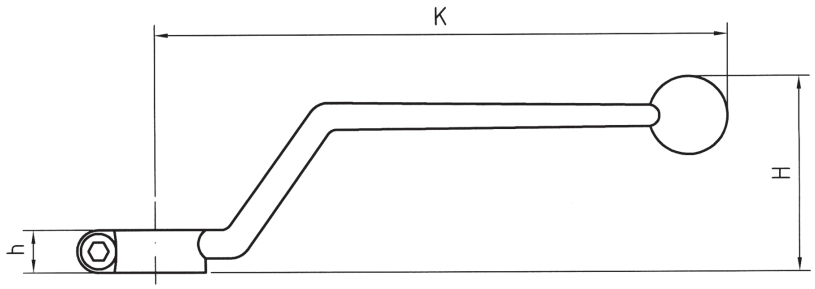

Aluminium ▪ Off-Set Design

SW	Dimensions (mm/in) K	h	H	Weight (kg/lbs)	Order Codes
12	160	12	55	0,07	Lever-BV-SW12-ALO
	6.30	.47	2.17	.16	

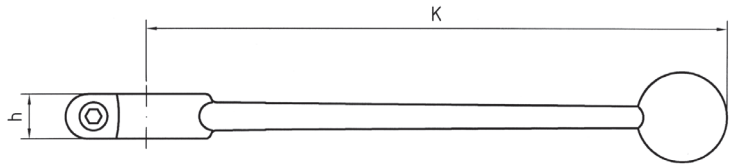

Zinc ▪ Straight Design

SW	Dimensions (mm/in) K	h	Weight (kg/lbs)	Order Codes
9	155	10	0,09	Lever-BV-SW09-ZNS
	6.10	.29	.20	
14	200	14	0,22	Lever-BV-SW14-ZNS
	7.87	.55	.48	

Aluminium ▪ Straight Design

SW	Dimensions (mm/in) K	h	Weight (kg/lbs)	Order Codes
9	150	11	0,06	Lever-BV-SW09-ALS
	5.91	.43	.13	
14	200	12	0,11	Lever-BV-SW14-ALS
	7.87	.47	.24	
17	320	16	0,27	Lever-BV-SW17-ALS
	12.60	.63	.59	

Please note: Alternative lever designs and materials deviating from the delivery standard can be ordered by adding -ZNO, -CSO, -W5O, -ALO, -ZNS or -ALS at the end of the ordering code of the complete ball valve (e.g. FBV-2-G20-0001-M-W5O).

Locking Device ▪ Type LD1

Dimensions / Order Codes

Nominal Size DN	SW	Dimensions (mm/in) B	L1	Order Codes 90° Operation	180° Operation
4-13	9	9	25	LD1-SW09	LD1S-SW09
		.35	.98		
16	12	12	40	LD1-SW12	LD1S-SW12
		.47	1.57		
20-25	14	14	40	LD1-SW14	LD1S-SW14
		.55	1.57		
32-50	17	17	50	LD1-SW17	LD1S-SW17
		.67	1.97		

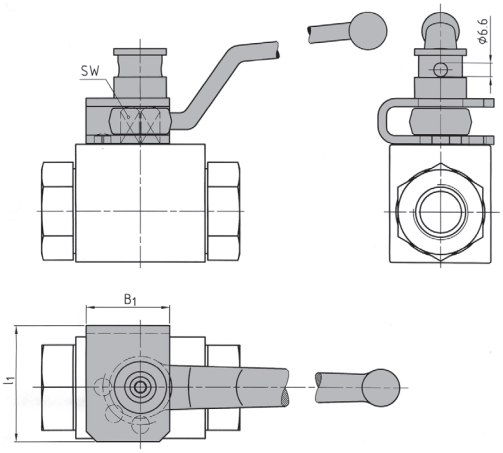

Characteristics

Locking kit consisting of shackle, sliding sleeve, link with screw and Steel lever.

Features

- Universal field-installed locking device
- High security: Cannot be dismounted when locked

Order Example

BBV-2-G10-0001-M-LD01

Suitability

Type	Description
BBV	Block Body Valve with Threaded Connections (SW 9-14)
FBV	Forged Body Valve with Threaded Connections (SW 17)
HBV	High-Pressure Block Body Valve with Threaded Connections (SW 9-14)
BBV-2-F	Block Body Valve with SAE Split Flange Connections (SW 9-14)
FBV-2-F	Forged Body Valve with SAE Split Flange Connections (SW 17)

Type	Description
BBV	Block Body Valve with SAE Flange Connections (SW 9-14)
FBV	Forged Body Valve with SAE Flange Connections (SW 17)
MBBV-2	Block Body Valve (Two-Way Selector) for Manifold Mounting (SW 9-17)
MCBVL-3	Block Body Valve (Three-Way Selector) for Manifold Mounting (SW 9-17)
MCBVSL-3	Block Body Valve (Three-Way Selector) for Manifold Mounting (SW 9-17)

Type	Description
CBV	Block Body Valve (Three-Way Selector) with Threaded Connections (SW 9-17)
CBVS	Block Body Valve (Three-Way Selector) with Threaded Connections (SW 9-17)

F

Locking Device ▪ Type LD2

Dimensions / Order Codes

Nominal Size DN	SW	Dimensions (mm/in) H	B1	B2	B3	Order Codes Individual Part
4-8	9	3,5	61	24	10	LD2-SW09-DN4-8
		.14	2.41	.94	.39	
10-13	9	3,5	61	24	10	LD2-SW09-DN10-13
		.14	2.41	.94	.39	
16	12	4,5	64	25,5	12	LD2-SW12
		.18	2.52	1.00	.47	
20-25	14	4,5	84	35,5	14	LD2-SW14
		.18	3.31	1.40	.55	
32-50	17	4,5	136	61,5	15	LD2-SW17
		.18	5.35	2.42	.59	

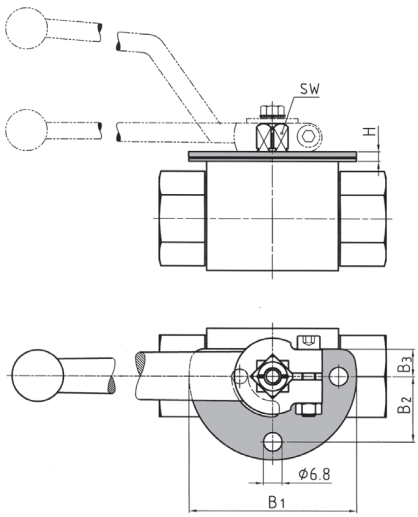

Characteristics

Locking kit consisting of locking plate, stopping disk and ring.

Features

- Field-installed locking device
- Can be dismounted after disassembly of lever

Order Example

BBV-2-G10-0001-M-LD02

Suitability

Type	Description
BBV	Block Body Valve with Threaded Connections (SW 9-14)
FBV	Forged Body Valve with Threaded Connections (SW 17)

Type	Description
BBV-2-F	Block Body Valve with SAE Split Flange Connections (SW 9-14)
FBV-2-F	Forged Body Valve with SAE Split Flange Connections (SW 17)

Type	Description
CBV (≤DN25)	Block Body Valve (Three-Way Selector) with Threaded Connections
BV-2	Round Body Valve with Direct Flange Connections up to DN 50 (acc. to SAE, ISO, CETOP)

Locking Device ▪ Type LD3

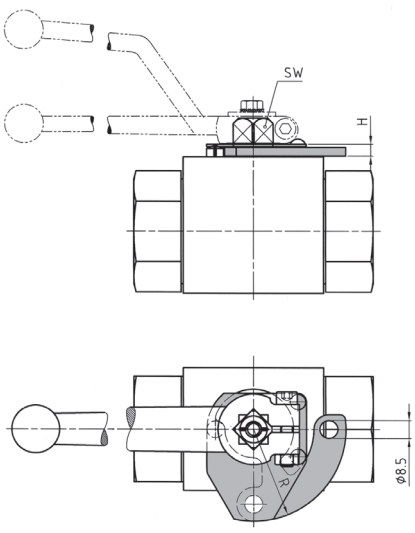

Dimensions / Order Codes

Nominal Size DN	SW	Dimensions (mm/in) H	R
4-13	9	4	37
		.16	1.47
16	12	4,3	40
		.17	1.57
20-25	14	5,5	43,5
		.22	1.71
32-50	17	6	69,5
		.24	2.74

Characteristics

Only available in combination with suitable ball valve.

Features

- Factory-installed locking device
- High security: Cannot be dismounted when locked

Order Example

FBV-2-G20-0001-M-LD3

F

Suitability

Type	Description
BBV	Block Body Valve with Threaded Connections

Type	Description
FBV	Forged Body Valve with Threaded Connections

Type	Description
CBV (≤DN25)	Block Body Valve (Three-Way Selector) with Threaded Connections

Locking Device ▪ Type LD4

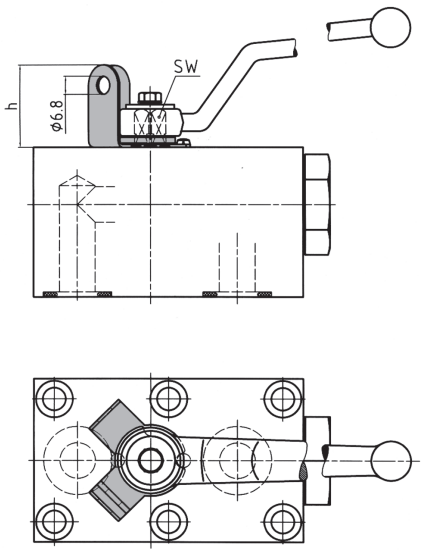

Dimensions / Order Codes

SW	Dimensions (mm/in) H	Order Codes 90° Operation	180° Operation
7	24	LD4-SW07-SS	LD4S-SW07-SS
	.94		
9 *	28	LD4-SW09-SS	LD4S-SW09-SS
	1.10		
14 *	34,5	LD4-SW14-SS	LD4S-SW14-SS
	1.36		
17	44	LD4-SW17-SS	LD4S-SW17-SS
	1.73		

* Lever displaced by 180°

Characteristics

Locking kit consisting of locking plate, stopping disk and ring.

Features

- Universal field-installed locking device (for off-set lever) Exception for type BV-2, assembled, only available in combination with ball valve
- Can be dismounted after disassembly of lever

Order Example

BBV-2-G10-0001-M-LD04

Suitability

Type	Description
BBV	Block Body Valve with Threaded Connections
FBV	Forged Body Valve with Threaded Connections
HBV	High-Pressure Block Body Valve with Threaded Connections
BV-2-C	Round Body Valve with Direct SAE Flange Connections up to DN50 (Only for Stainless Steel)
BV-2-ISO	Round Body Valve with ISO Flange Connections up to DN50 (Only for Stainless Steel)
BV-2-CET	Round Body Valve with CETOP Flange Connections up to DN50 (Only for Stainless Steel)

Type	Description
MBBV-2	Block Body Valve (Two-Way Selector) for Manifold Mounting
MCBVL-3	Block Body Valve (Three-Way Selector) for Manifold Mounting
MCBVSL-3	Block Body Valve (Three-Way Selector) for Manifold Mounting
CBV	Block Body Valve (Three-Way Selector) with Threaded Connections
CBV	Block Body Valve (Three-Way Selector) with SAE Flange Connections
CBVS	Block Body Valve (Three-Way Selector) with Threaded Connections
LBV	Block Body Valve (Three-Way Selector) with Threaded Connections
TBV	Block Body Valve (Three-Way Selector) with Threaded Connections
TBV	Block Body Valve (Four-Way Selector) with Threaded Connections
XBV	Block Body Valve (Four-Way Selector) with Threaded Connections

Locking Device ▪ Type LD5

Dimensions

STAUFF Size	Dimensions (mm/in) A1	D	H	M	t
40	62,5	145	71,5	M6	10
	2.46	5.71	2.81		.39
48	62,5	145	71,5	M8	12
	2.46	5.71	2.81		.47
64	67,5	155	74,5	M8	12
	2.66	6.10	2.93		.47
80	72,5	165	104,5	M8	12
	2.85	6.50	4.11		.47

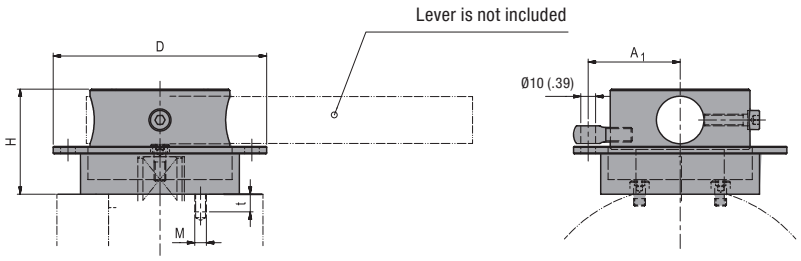

Characteristics

Only available in combination with suitable ball valve.
Locking device requires modification in valve body.

Order Example

BV-2-C340U-0001-M-LD5

Suitability

Type	Description
BV-2-C	Round Body Valve with Direct SAE Flange Connections
BV-2-CET	Round Body Valve with Direct ISO 6164 Flange Connection
BV-2-ISO	Round Body Valve with Direct CETOP Flange Connection

F

Locking Device ▪ Type LD6 US Version

Suitability

Type	Description
FBV	Forged Body Valve with Threaded Connections
FBV-2-F	Forged Body Valve with SAE Split Flange Connections
FBV	Forged Body Valve with SAE Flange Connections

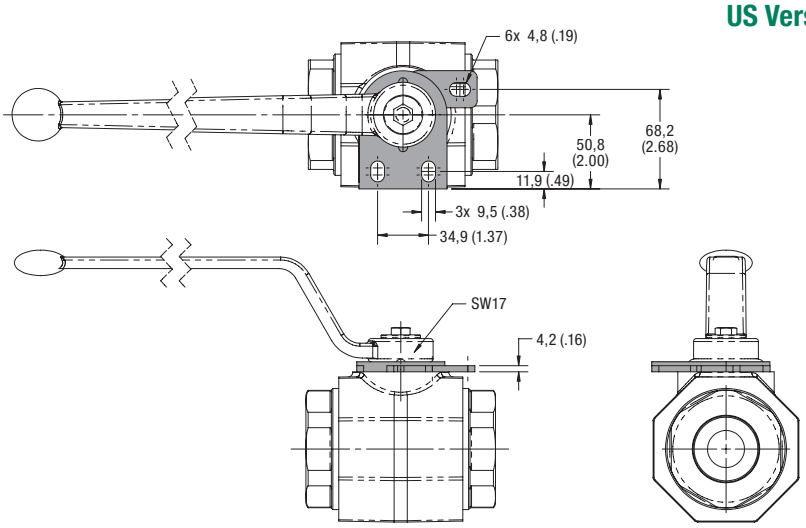

Characteristics

Only available in combination with suitable ball valve.

Order Example

FBV-2-G20-0001-M-LD6

Locking Device ▪ Type LD7 US Version

Dimensions

STAUFF Size	SW	Dimensions (mm/in) ØA	B	h	h2
08	12	8,5	59	2	
		.33	2.32	.08	
12-16	14	8,5	64	2	
		.33	2.52	.08	
20-32	17	9,5	83	2	
		.37	3.27	.08	
40	16	9,5	102	3	
		.37	4.01	.12	
48	19	9,5	93		27
		.37	3.66		1.06
64	24	9,5	113	3	
		.37	4.45	.12	
80	36	9,5	134	3	
		.37	5.28	.12	

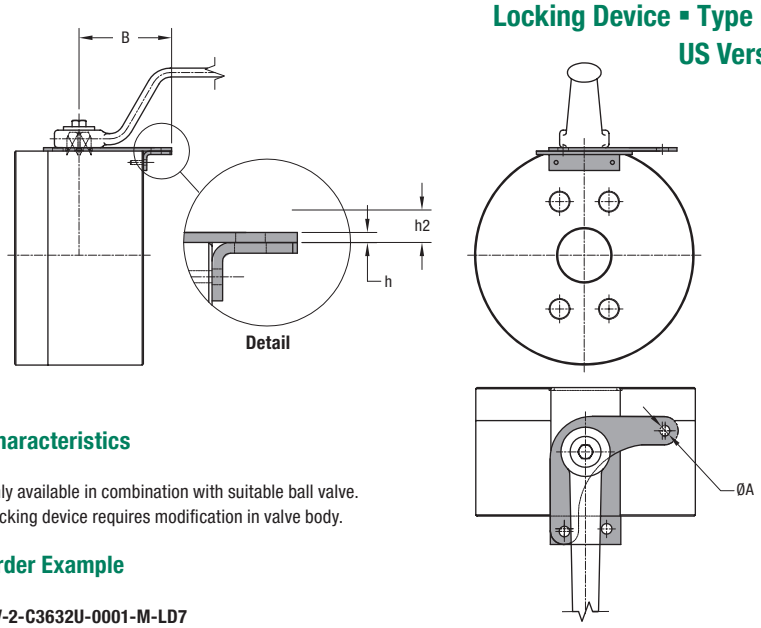

Suitability

Type	Description
BV-2-C	Round Body Valve with Direct SAE Flange Connections

Please contact STAUFF for use with types BV-2-ISO and BV-2-CET.

Dimensional drawings: All dimensions in mm (in).

Characteristics

Only available in combination with suitable ball valve.
Locking device requires modification in valve body.

Order Example

BV-2-C3632U-0001-M-LD7

Double-Acting Pneumatic Actuators ▪ Type AD
Single-Acting Pneumatic Actuators ▪ Type AS
Electric Actuators ▪ Type AE

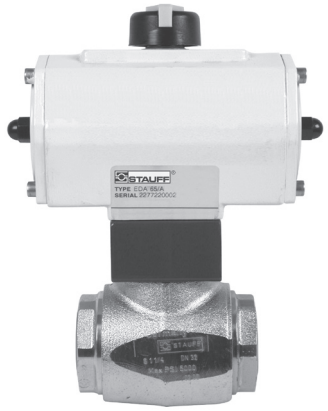

Most STAUFF ball valves can be factory-mounted to compact and efficient pneumatic or electric actuators for both high-pressure and low-pressure applications.

The actuators feature simple, robust construction and are suitable for applications with high cycle requirements.

Please note: The minimum air supply for pneumatic actuators is usually 5,5 bar / 80 PSI. They are designed for 90° open / close applications only and should not be used for valve throttling.

Please contact STAUFF for further information.

F

Limit / Proximity Switches

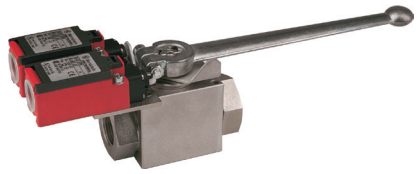

Limit Switches

Options / configurations available:

-SO open
-SC closed
-SOC open/closed

Please contact STAUFF for further information.

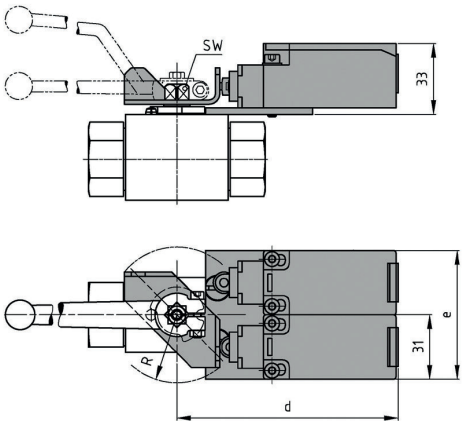

STAUFF Size	Nominal Size DN	Dimensions (mm/in) SW	d	e	R
02-05	4-8	9	102	60	32
		.35	4.02	2.36	1.26
06	10	9	102	60	32
		.35	4.02	2.36	1.26
08	13	9	102	60	32
		.35	4.02	2.36	1.26
10	16	12	108	73	40
		.47	4.25	2.87	1.57
12	20	14	106	70	37,5
		.55	4.17	2.76	1.48
16	25	14	106	70	37,5
		.55	4.17	2.76	1.48
20-32	32-50	17	114	85	49
		.67	4.49	3.35	1.93

Proximity Switches

Options / configurations available:

-PO open
-PC closed
-POC open/closed

Please contact STAUFF for further information.

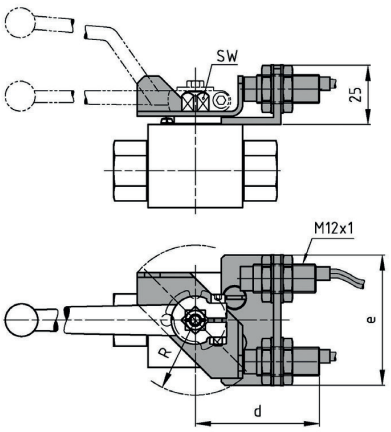

STAUFF Size	Nominal Size DN	Dimensions (mm/in) SW	d	e	R
02-05	4-8	9	54	55	32
		.35	2.13	2.17	1.26
06	10	9	54	55	32
		.35	2.13	2.17	1.26
08	13	9	54	55	32
		.35	2.13	2.17	1.26
10	16	12	60	68	40
		.47	2.36	2.68	1.57
12	20	14	58	64	37,5
		.55	2.38	2.52	1.48
16	25	14	58	64	37,5
		.55	2.38	2.52	1.48
20-32	32-50	17	66	80	49
		.67	2.60	3.15	1.93

Ball Valves with Detents ▪ Type DT...

Dimensions

Multi-Way Ball Valves (Types LBV / TBV / XBV)

STAUFF Size	Nominal Size DN	Dimensions (mm/in) SW	K	H	R	g	t
02	4	12	175	45	20	6	7
		.47	6.89	1.77	.79	.24	.28
04	6	12	175	45	20	6	7
		.47	6.89	1.77	.79	.24	.28
05	8	14	200	45	29	6	4
		.55	7.87	1.77	1.14	.24	.16
06	10	14	200	45	29	6	4
		.55	7.87	1.77	1.14	.24	.16
08	13	14	200	45	29	6	4
		.55	7.87	1.77	1.14	.24	.16
10	16	17	200	45	29	6	4
		.67	7.87	1.77	1.14	.24	.16
12	20	17	240	45	28	6	4
		.67	9.45	1.77	1.10	.24	.16
16	25	17	240	45	28	6	4
		.67	9.45	1.77	1.10	.24	.16

Please contact STAUFF for further information.

Order Example

LBV-3-G06-0001-M-D1

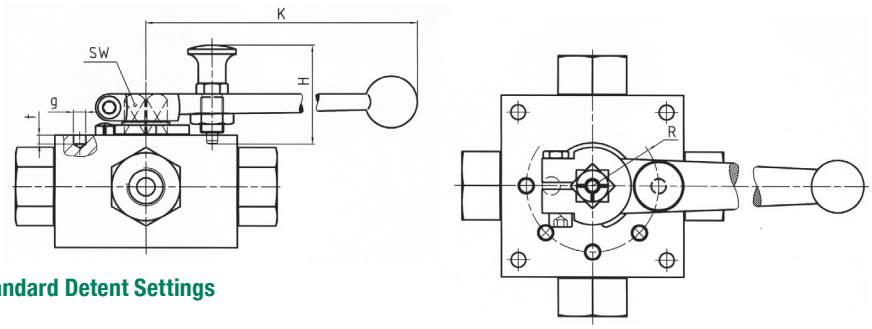

Standard Detent Settings

-D1	0° / 90° (standard clockwise)
-D2	0° / 45° (standard clockwise)
-D3	0° / 45° / 90° (standard clockwise)
-D4	0° / 45° / 90° / 135° (standard clockwise)
-D5	0° / 90° / 180° (standard clockwise)

F

Ball Valves with Assembly Holes ▪ Type SM

Dimensions

Block Body Ball Valves (Types BBV / CBV / CBVS)

STAUFF Size	Nominal Size DN	Dimensions (mm/in) SW	a	g	t
02	4	9	31	4,3	4,5
		.35	1.22	.17	.18
04	6	9	31	4,3	4,5
		.35	1.22	.17	.18
05	8	9	31	4,3	4,5
		.35	1.22	.17	.18
06	10	9	32	4,3	4
		.35	1.26	.17	.16
08	13	9	32	4,3	4
		.35	1.26	.17	.16
10	16	12	32	5,2	6
		.47	1.26	.20	.24
12	20	14	44	6,2	6
		.55	1.73	.44	.24
16	25	14	44	6,3	6
		.55	1.73	.25	.24

Please contact STAUFF for further information.

Order Example

BBV-2-G06-0001-M-SM

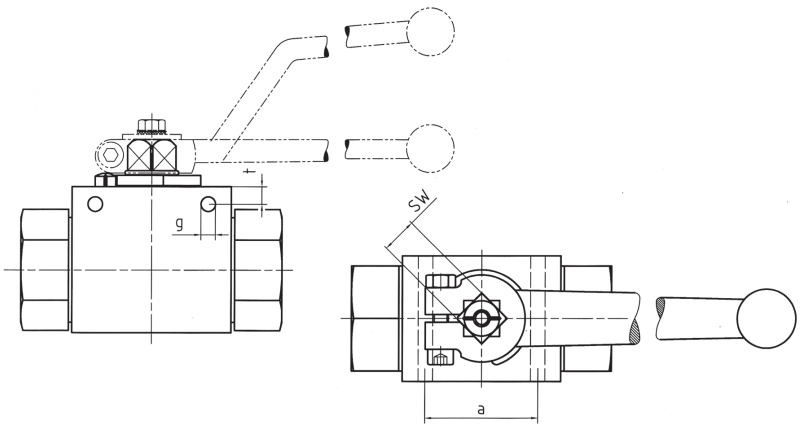

Ball Valves with Assembly Threads ▪ Type PM

Dimensions

Block Body Ball Valves (Types BBV / HBV / CBV / CBVS up to STAUFF Size 16)
Forged Body Ball Valves (Types FBV from STAUFF Size 20 on)

STAUFF Size	Nominal Size DN	Dimensions (mm/in) SW	LK	g	t1	t2	w	ISO 5211
02	4	9	36	M5	6	7,5	30° *	F03 *
		.35	1.42		.24	.30		
04	6	9	36	M5	6	7,5	30° *	F03 *
		.35	1.42		.24	.30		
05	8	9	36	M5	6	7,5	30° *	F03 *
		.35	1.42		.24	.30		
06	10	9	36	M5	7	9	45°	F03
		.35	1.42		.28	.35		
08	13	9	36	M5	6	8	45°	F03
		.35	1.42		.24	.31		
10	16	12	42	M5	8	10	45°	F04
		.47	1.65		.31	.39		
12	20	14	50	M6	10	14	45°	F05
		.55	1.97		.39	.55		
16	25	14	50	M6	10	12	45°	F05
		.55	1.97		.39	.47		
20	32	17	50	M6	8	12	45°	F05
		.67	1.97		.31	.47		
24	40	17	50	M6	8	12	45°	F05
		.67	1.97		.31	.47		
32	50	17	50	M6	8	12	45°	F05
		.67	1.97		.31	.47		

Order Example

BBV-2-G06-0001-M-PM

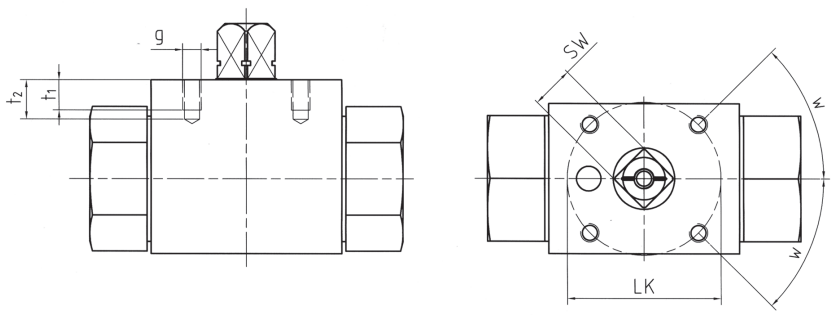

* 30° is not corresponding to ISO 5211
Standard option without Stop Pin, Thrust Ring and Lever.
Please contact STAUFF for further information.

Porting Patterns

Type	Symbol	Porting Pattern	Code	Stop of End Position	Operating Angle	Overlap
MCBVL-3	LLu		**P58**		90°	negative
MCBVSL-3	Lu		**P57**		180°	positive
		* Pressure inlet possible from all ports! Must be operated without pressure!				
CBVL	L		**P50**		90°	negative
CBVT	T		**P51**		90°	negative
CBVSL	L		**P55 ***		90°	negative
CBVST	T		**P56 ***		90°	negative
		* Pressure inlet possible from all ports! Must be operated without pressure!				
Not Allowed	T	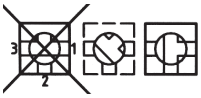		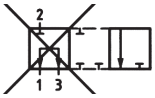		
LBV-3	L		**P01**		90°	positive
TBV-3	T		**P02**		90°	positive

Alternative Porting Patterns LBV-3 / TBV-3

-LL45		**P03**		45°	negative
-TL45		**P04**	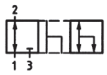	45°	negative
-LI90-1		**P06**		90°	negative
-TL90-1		**P08**		90°	negative
-TI90		**P09**		90°	negative
T	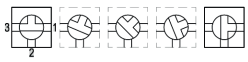	**P99**		90°	positive

Alternative porting patterns have to be indicated by adding the code (e.g. **-P03**) at the end of the order code!

Porting Patterns

Type	Symbol	Porting Pattern	Code	Stop of End Position	Operating Angle	Overlap
TBV-4	T		**P13**		90°	positive
XBV-4	X		**P14**	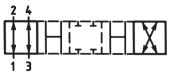	90°	negative with closed position

Alternative Porting Patterns TBV-4 / XBV-4 / LBV-4

-X45		**P15**	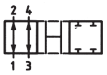	45°	negative
-XI45		**P16**	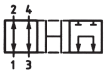	45°	negative
-XI90		**P17**	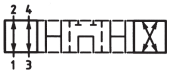	90°	negative
-LI90		**P18**		90°	negative
-XT90		**P19**		90°	negative
-TL90-2		**P21**		90°	negative
-XL90-1		**P22**		90°	negative
-XL90-2		**P23**		90°	negative
-L180		**P27**		180°	positive

Alternative porting patterns have to be indicated by adding the code (e.g. **-P03**) at the end of the order code!

F

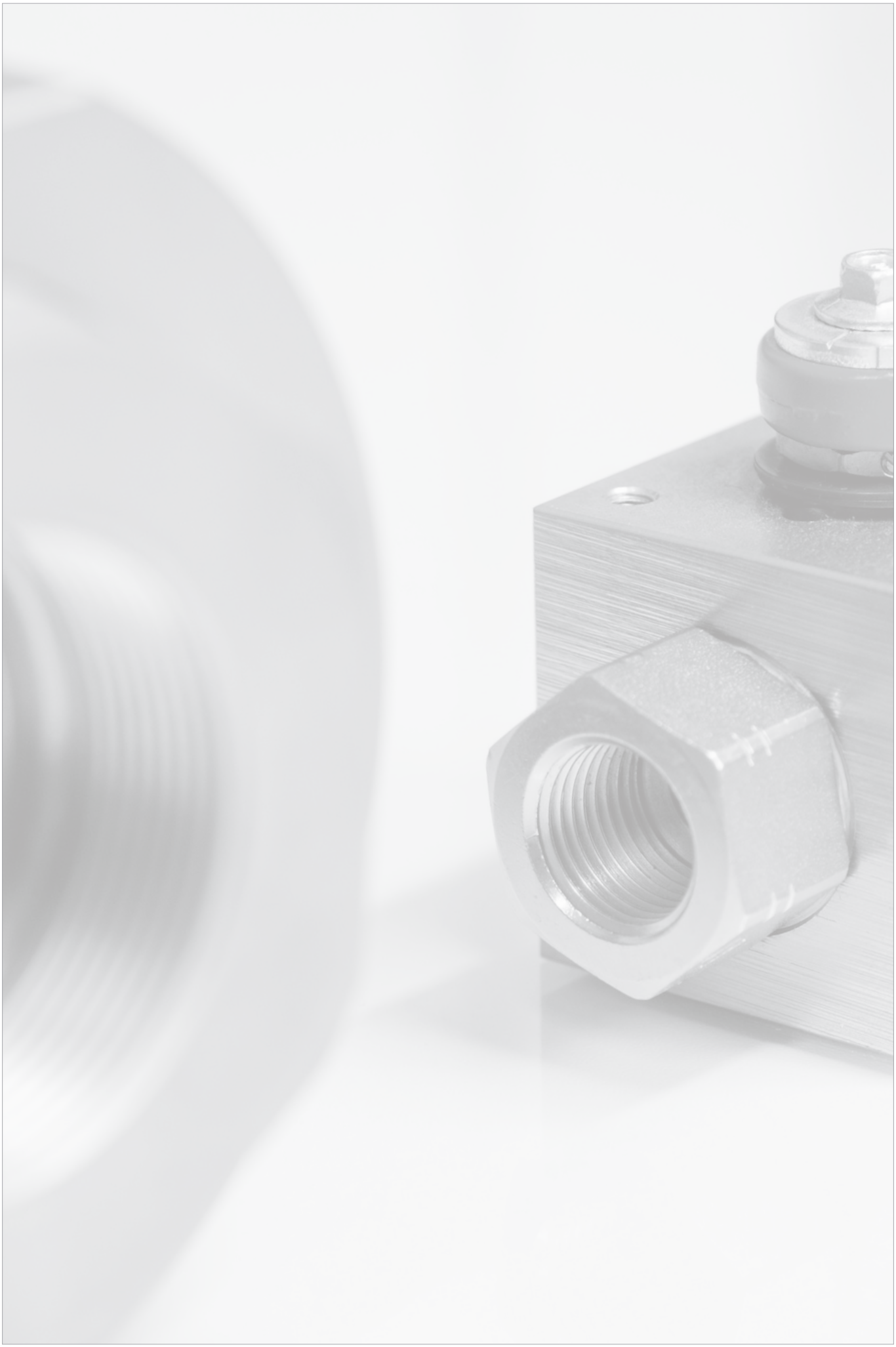

Nomenclature Definitions	124
Standard Materials	124
Admissible Working Pressures	125
Surface Coatings	125
Determination of the Nominal Diameter	126
Flow Characteristics	127
Torque Figures	128
Pressure Equipment Directive CE-Marking of STAUFF Valves	129
Storing and Assembling Instructions	129
Sealing Variations	130

Nomenclature Definitions

Nominal Pressure PN

The nominal pressure indicates the pressure rate of a hydraulic component and continuous dynamic application. The number is rounded up in order to comply with the internationally specified terms.

These nominal pressure values are internationally recognised and assist to appoint common component dimensions. For all ball valves conform to a design and test pressure 1.5 x PN according to DIN 3230 T5 and ISO 5108 for body. For ball seats we admit 1,1 x PN.

The nominal pressure specifies the admissible working overpressure at +20°C / 68°F. Please consider the pressure reduction at higher temperature.

Maximum Working Pressure $P_{max.}$

$P_{max.}$ is the maximum working pressure of a component including pressure peaks for limited duration of dynamic application resp. the maximum working pressure which considers temperature reduction ratings.

Burst Pressure P_{Burst}

The safety factor for burst pressure tests is a minimum of 2.4 times the nominal pressure.
$P_{Burst} = 2.4 \times PN$

Nominal Diameter DN

The nominal diameter is a numeric dimension of mating parts without indication of outer tube diameter or thread size, for example flanges. The nominal diameters match approximately the clear diameter of the ball valves in mm. Reduced diameters are marked by STAUFF with for example DN25/32. That corresponds to the ball valve being DN 25 and the adapter being DN 32.

Leakage Rate

Leakage rate of ball valves with synthetic ball seats: DIN EN 12266 leakage rate A
(No visually noticeable leakage during the duration of the test with fluid or air).

G

Standard Materials

Valve Body, Connections Adapters, Stem and Ball

Material Description	Standard	Temperature Range [1]	Applications
Free Cutting Steel 11SMn30 (formerly 9SMn28K)	1.0715 / DIN EN 10277-3 (SAE 1213)	-20°C ... +120°C -4°F ... +248°F	General oil hydraulics without special requirements on the material
Low Alloy Steel S355J2G3 (formerly St52-3)	1.0570 / DIN EN 10025	-40°C ... +120°C -40°F ... +248°F	General oil and water hydraulics as well as gas applications with special requirements to the yield stress
Stainless Steel X6CrNiMoTi17-12-2 X5CrNiMo17-12-2 X2CrNiMo17-13-2	DIN EN 10088 1.4571 (AISI 316 Ti) 1.4401 (AISI 316) 1.4404 (AISI 316 L)	-200°C ... +200°C -328°F ... +392°F	Special applications in the chemical and power industries with specific requirements on the material and corrosion protection

Ball Seats

Material Description	Trade Name	Temperature Range	Applications
Polyacetal POM	Delrin Hostaform C Ultraform	-30°C ... +100°C -86°F ... +212°F	High pressure and wear resistance, low water absorption, particularly suitable for hydraulic oils, other oils and water based hydraulic fluids
Polytetrafluorethylene PTFE	Teflon Hostflon Fluon	-200°C to +220°C [2] -328°F ... +428°F [2]	Excellent chemical resistance to almost all fluids, no water absorption, low surface friction. (Suitable for food FDA-US Food and Drug Administration) Higher characteristic compounds available.
Polyvinylidenfluorid PVDF	Dyflor Kynar Solef	-40°C ... +120°C [2] -40°F ... +302°F [2]	Mechanical properties like Teflon, but higher rigidity and lower thermal stability, resistant to ketones and esters at higher temperatures
Polyetheretherketone PEEK	Arlon Victrex	-40°C ... +250°C -40°F ... +482°F	Good chemical resistance to many mediums, suitable for steam, high temperature resistance, high wearability
Cast iron GG25	0.60257 DIN 1651	-40°C ... +250°C -40°F ... +482°F	Applications for abrasive fluids

Stem and Adapter Sealing Materials

Material description	Trade Name	Temperature Range	Applications
Acrylonitrile Butadiene Rubber **NBR**	Buna N Perbunan Hycar Chemigum	-30°C ... +100°C -86°F ... +212°F	Good technical properties, therefore especially suitable for oils and gaseous mediums
Fluor Rubber **FPM**	Viton Fuorel Tecnoflon	-20°C ... +200°C -4°C ... +392°F	High chemical resistance to various mediums, in particular mineral oils, fuels and concentrated acids
Ethylene Propylene Diene Monomer Rubber **EPDM**	Buna AP Nordel	-50°C ... +130°C -58°C ... 266°F	Good ageing stability, low wear, especially suitable for actylene, brake fluids, hot water, superheated steam, cooling gases, low-flammable liquids based upon Phosphoric acid
Polytetrafluorethylene **PTFE**	Teflon Hostflon Fluon	-200°C ... +220°C [2] -328°F ... +428°F [2]	Excellent chemical resistance to almost all fluids, no water absorption, low surface friction. (Suitable for food FDA-US Food and Drug Administration) Higher characteristic compounds available.

[1] General temperature limits: A rating above the indicated limits is possible when the temperature reduction ratings are taken into consideration.
[2] Pressure / temperature curve must be observed.

Admissible Working Pressures

PTFE Ball Seats

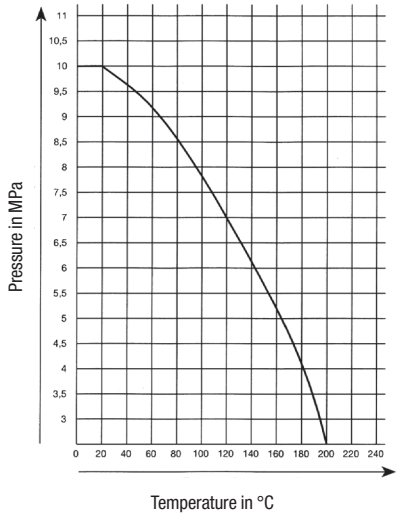

PTFE Ball Seats
Glass-Fibre Reinforced

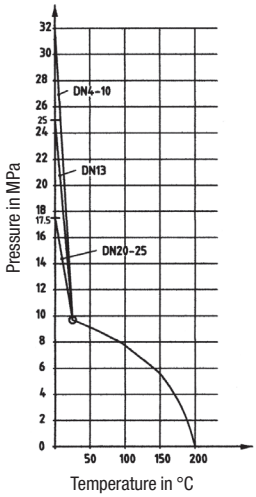

PVDV Ball Seats

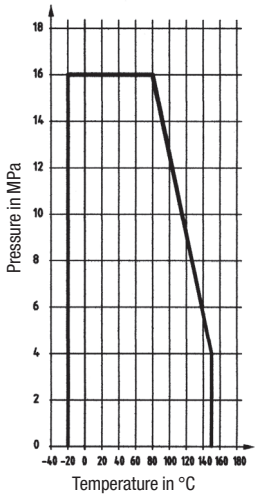

Surface Coatings

G

Zinc/Iron-Coating

Carbon steel products are supplied as standard with a high-quality zinc/iron-coating, which is a CrVI-free is a galvanic plated surface protection, corresponding to all demands according to the valid European regulations of the automobile industry, as well as the RoHS decree.

- Fe / ZnFe8 / Cn according to DIN 50979
- Approx. 96 hours resistance against white rust in the salt spray test to DIN EN ISO 9227
- Approx. 300 hours resistance against red rust in the salt spray test to DIN EN ISO 9227
- Free of hexavalent chromium Cr(VI)
- RoHS compliant according to 2002/95/EC (Restrictions of the Use of Hazardous Substances)
- ELV compliant according to 2000/53/EC(End of Life Vehicles Directive)

Besides the standard zinc/iron-coating, STAUFF can also supply the following surface coatings or surface treatments for the body materials:

Carbon Steel
- zink/nickel-plated
- chemically nickel-plated
- varnished

Stainless Steel
- rotary or traction quality
- glass bead blasted
- electro polished
- ceramic finished

Aluminium
- anodised
- hard anodised

STAUFF Zinc/Iron-Coating

Approx. **96 hours** resistance against white rust
Approx. **300 hours** resistance against red rust
in the salt spray test to DIN EN ISO 9227

Yellow Zinc Plating

Corrosion clearly visible after **154 hours**
in the salt spray test to DIN EN ISO 9227

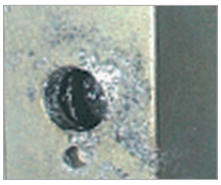

Phosphating

Corrosion clearly visible after **19.5 hours**
in the salt spray test to DIN EN ISO 9227

STAUFF Zinc/Nickel Coating

Layers
- Sealing
- Passivation
- Zinc/Nickel
- Steel

With at least 1200 hours resistance against red rust, the STAUFF Zinc/Nickel surface coating offers excellent surface protection – even after transport, handling and assembly. This was confirmed by testing in the salt-spray chamber according to DIN EN ISO 9227.

Users across all industries and applications benefit from sophisticated technology, which has been developed for and used by the very demanding automotive industry for many years now and that is already the proven standard for a large proportion of STAUFF components since 2007.

- At least 1200 hours resistance to red rust / base metal corrosion under practical conditions in the salt-spray chamber according to DIN EN ISO 9227
- White rust occurs only by way of a slight grey haze
- Surpassing the requirements of the corrosion protection class K5 as defined by the VDMA, the German Engineering Association (360 hours resistance to white rust / 720 hours resistance to red rust)
- Free of hexavalent chrome Cr(VI)
- ELV compliant according to 2000/53/EC (End of Life Vehicles Directive)
- REACH compliant according to 1907/2006/EC (Registration, Evaluation, Authorisation and Restriction of Chemicals)
- RoHS compliant according to 2002/95/EC (Restrictions of the Use of Hazardous Substances)
- Appealing colour scheme with a bright semi-gloss surface finish – comparable to Stainless Steel
- Significantly reduced tendency to corrosion by contact with other metals (such as Aluminium and Stainless Steel)
- Improved abrasion resistance due to the ductility / plastic deformability of the coating
- Little to no risk of triggering allergies – nickel release is down to only a fraction of the statutory limits relating to objects which come into direct and prolonged contact with the skin (independent results of the reference test method according DIN EN 1811 are available on request)
- Good paint adhesion properties
- Resistance against all commonly used hydraulic media

Determination of the Nominal Diameter

Using a Nomogram

This nomogramm provides a guide for the determination of the nominal diameter (DN). We recommend to use the following flow rates as a basic guideline:

Suction lines:	0,5 ... 0,8 m/sec (.15 ... .24 ft/sec)
Return lines:	2,0 ... 4,0 m/sec (.61 ... 1.22 ft/sec)
Pressure lines >10 MPa:	2,0 ... 4,0 m/sec (.61 ... 1.22 ft/sec)
Pressure lines >50 MPa:	3,0 ... 12,0 m/sec (.91 ... 3.66 ft/sec)

Example 1

Velocity v = 8 m/sec (2.44 ft/sec)
Flow rate Q = 150 l/min (40 US GPM)

The straight line linking these two values on the outer scales intersects the nominal diameter DN 20 on the middle scale.

Example 2

Velocity v = 5,5 m/sec (1.68 ft/sec)
Flow rate Q = 66 l/min (17 US GPM)

The straight line linking these two values on the outer scales intersects the nominal diameter DN 16 on the middle scale.

Please note:

No allowance is incorporated for the resistance of the pipes, elbows and valves, viscosity, the effect to temperature on viscosity and other factors.

Contact STAUFF for further information.

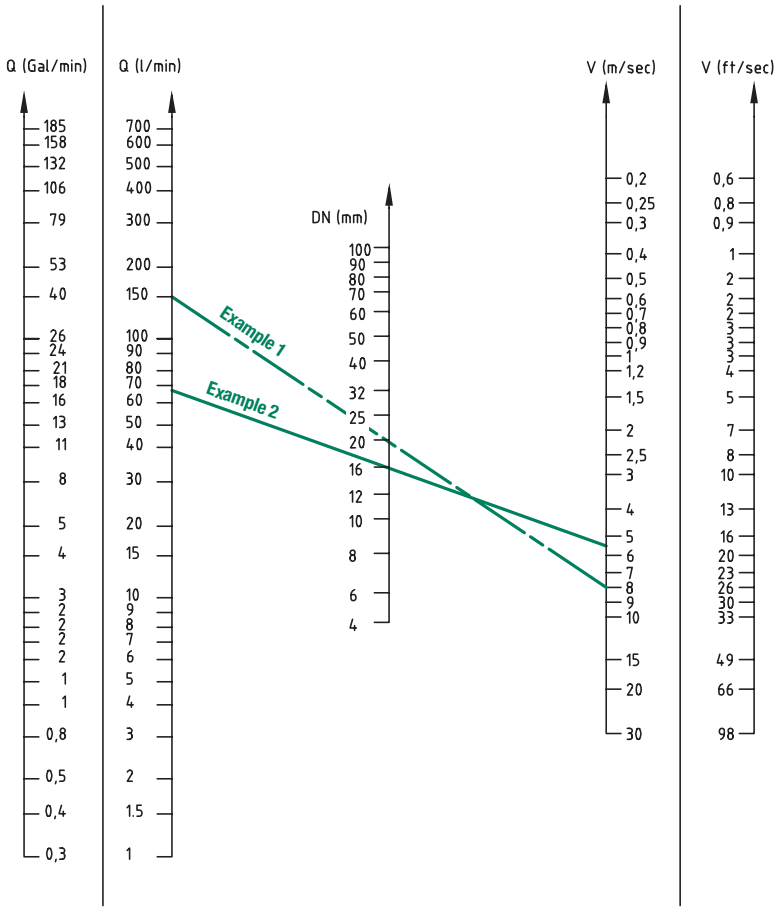

Determination of the Nominal Diameter

Using a List of Nominal Flow Rates

The indicated flow rates have been determined for ball valves in open position with water at a temperature of +15°C / +60°F.

K_v Coefficient

The nominal flow rate coefficient K_v according to German standard VDI/VDE 2173 indicates the quantity of water in cubic meter per hour (m^3/h) at

Δp = 1 bar / 14.5 PSI and 35 mm^2/s (cSt)
at +5 ... +30°C / +41 ... +86°F.

C_v Coefficient

The C_v value (which is still common practice in USA) specifies how much US gallons of water flow through the valve per minute (US GPM) at

Δp = 1 bar / 14.5 PSI at +15°C / +60°F.

Contact STAUFF for further information.

Nominal Size DN		K_v	C_v
(mm)	(in)	(m^3/h)	(US GPM)
15	1/2	19,4	22,6
20	3/4	45,6	53,0
25	1	71,5	83,1
32	1-1/4	105	122,1
40	1-1/2	170	197,7
50	2	275	319,8
65	2-1/2	507	589,5
80	3	905	1052,3
100	4	1414	1644,2
125	5	2362	2746,5
150	6	3694	4295,3

Flow Characteristics of STAUFF Valves

The following characteristics are are valid for mineral oils with denisty of 0,85 kg/dm³ and a kinematic viscosity of 35 mm²/s (35 cSt).

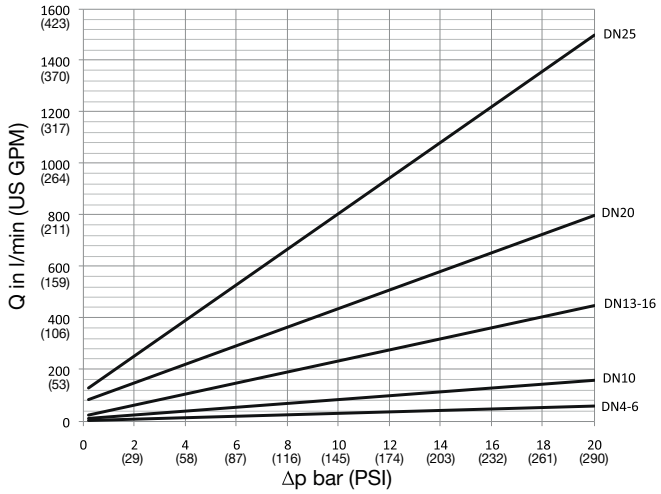

LBV-3 / TBV-3 / XBV-4

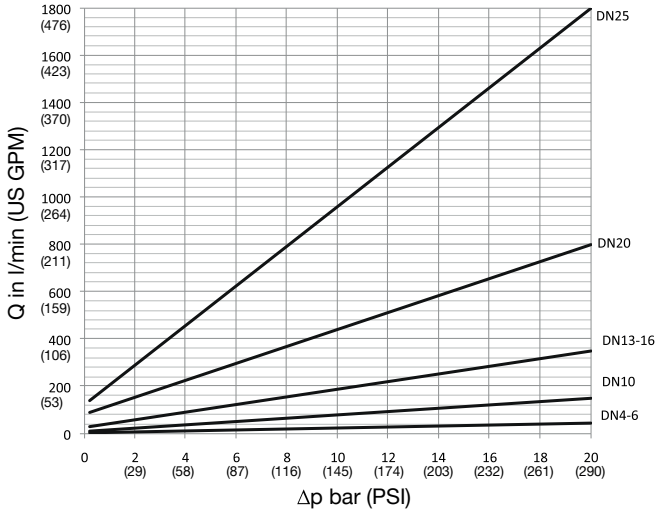

XBV-4

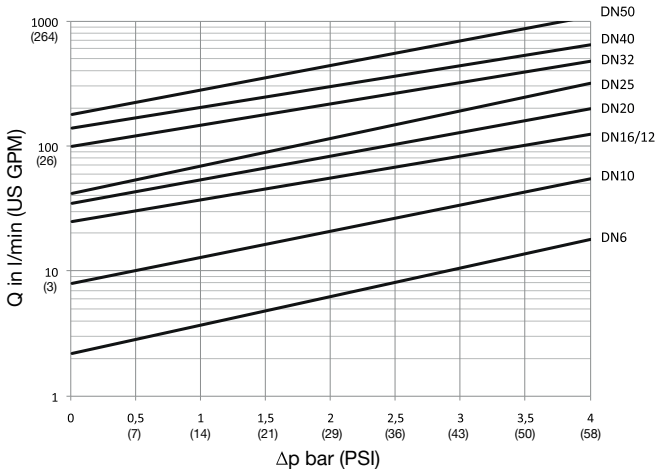

MBBV-2

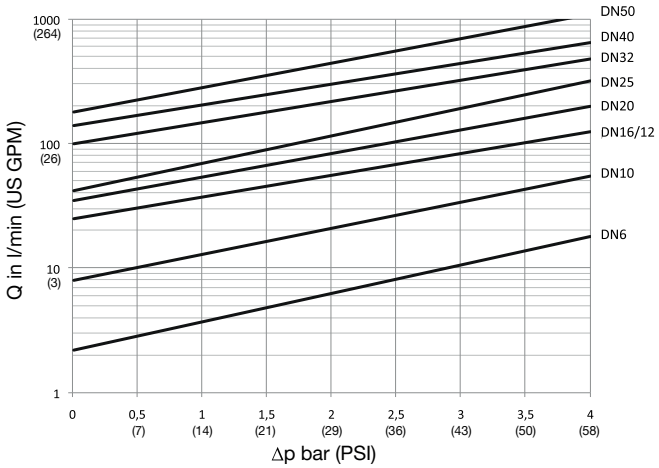

MCBVL-3

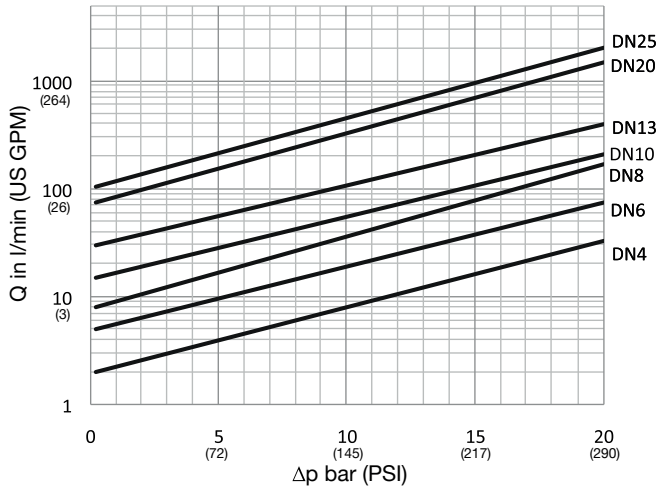

CBVL / CBVT

G

Torque Figures

Torque / Operation Pressure Curves

Operating torque for ball valves with POM seats

BBV
CBV

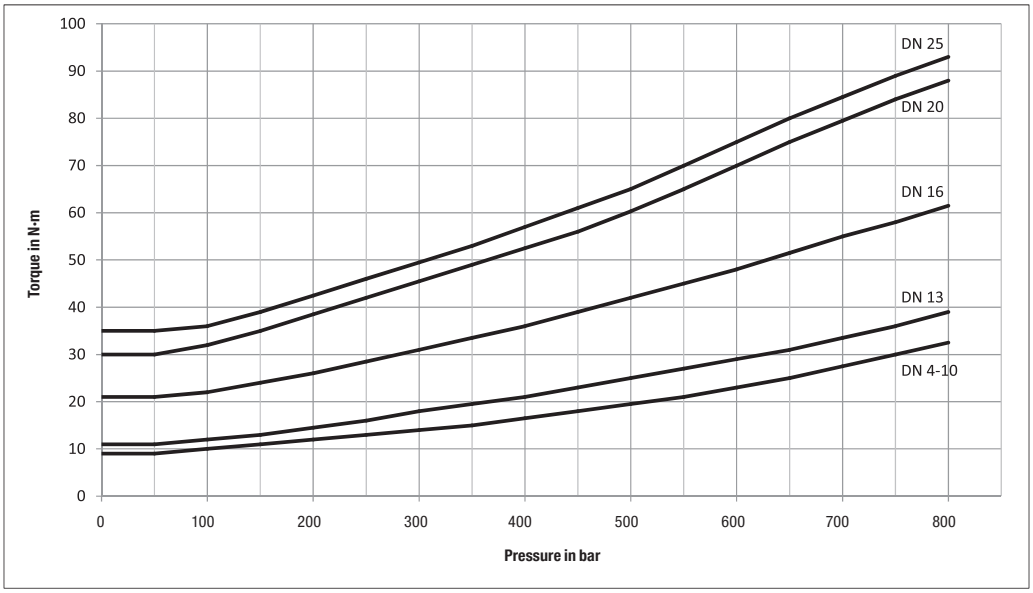

Operating torque for ball valves with Teflon or POM seats

FBV

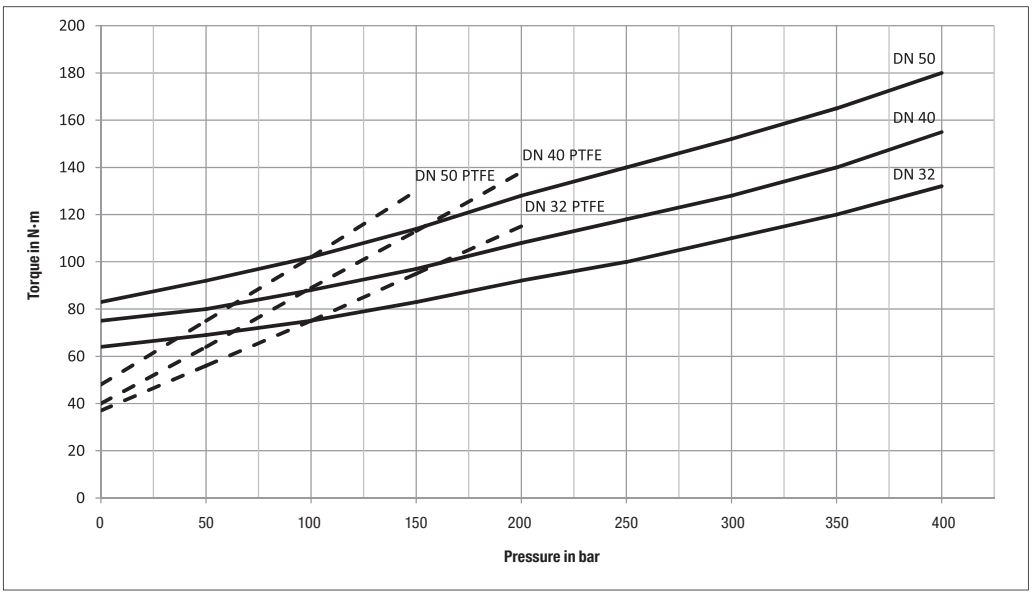

Operating torque for ball valves with POM seats

LBV
TBV
XBV

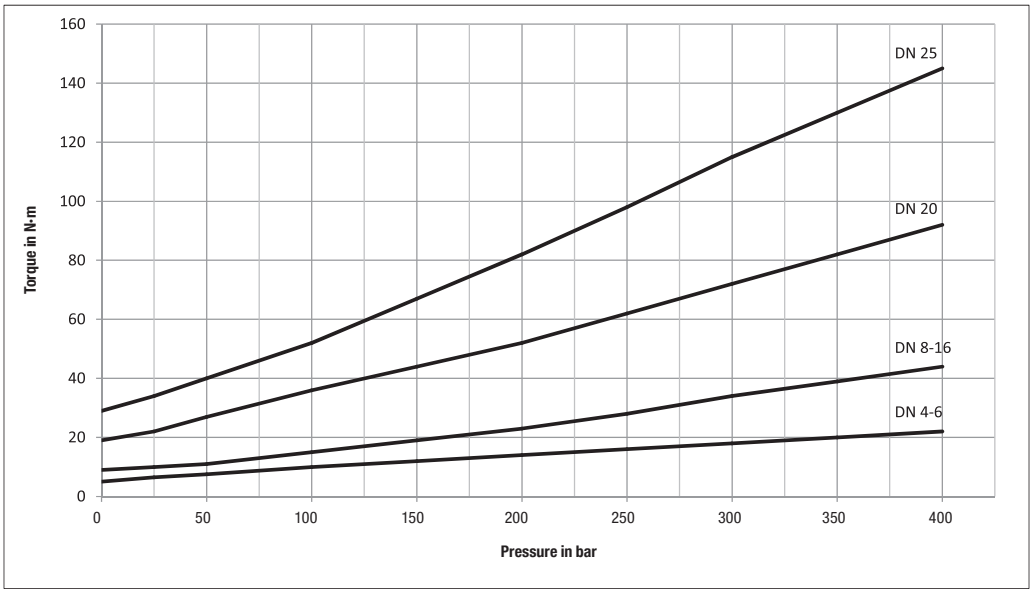

Test medium: water glycol

Listed torque values (MD) do not include safety factors. We recommend to add the following safety factors:

Greasing media (e.g. oil)	MD x 1.5
Non-greasing media (e.g. gas, water)	MD x 2.0

G

Pressure Equipment Directive CE-Marking of STAUFF Valves

Information about essential contents and consequences of the Pressure Equipment Directive (PED 97/23 EC) and the CE-marking for STAUFF valves

From 29th May 2002 the application of the Pressure Equipment Directive (PED 97/23 EC) is mandatory throughout in the European Community.

Responsibility

Manufacturers are obliged to ensure that products which are placed on the market in the European Community are designed and manufactured according to the regulations of the Pressure Equipment Directive.

The company is only allowed to purchase and use pressure equipment which corresponds to the regulations of the Pressure Equipment Directive.

Procedure

Valves have to be classified in categories (category I to III). Category I relates to the lowest, category III to the highest, hazard category.

The classification is carried out under consideration of

- diameter
- pressure
- medium-hazardous or harmless gases or liquids

Group 1 comprises hazardous mediums

- explosive
- extremely flammable
- highly flammable
- flammable (where the maximum allowable temperature is above flashpoint)
- very toxic
- toxic
- oxidising

Group 2 comprises all harmless mediums which are not listed in Group 1 such as hydraulic oil, water, air and oxygen.

Consequences

No CE-marking for:

- All valves < DN200 for harmless liquids of Group 2, such as hydraulic oil, water
- All valves up to and including DN 25 for all mediums in Group 1 and 2 (gaseous and liquid)

CE-marking for valves ≥ DN 32:

- With regards to valves of category I and II, STAUFF prepares a declaration of conformity.
- With regards to valves of category III an external conformity examination is necessary.
- The resulting costs will be included in our quotation.

Concerning valves of the categories I to III, it has to be observed that:

- a certification of conformity has to be enclosed with each delivery.
- operating instructions have to be enclosed with each packing unity.
- the traceability of products must be guaranteed.

G

Storing and Assembling Instructions

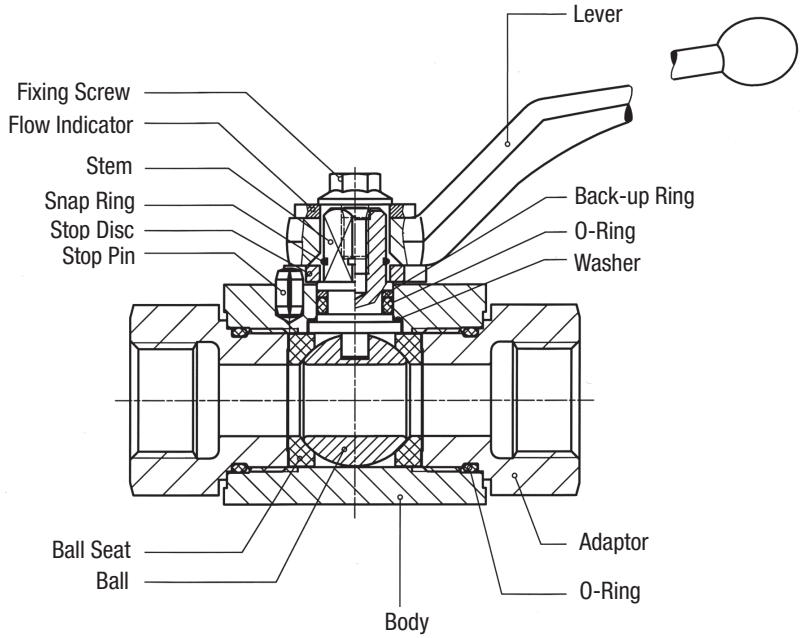

The assembly of the lever and the flow indicator has to be carried out the way that the groove of the stem and the groove of the indicator are identical in direction.

STAUFF delivers ball valves of first-class quality. This is guaranteed by the utmost care as far as construction and production of our products are concerned. All STAUFF products must pass our rigid quality assurance system ensuring the high standard of quality. As a matter of course, quality approvals can be supplied on request.

In order to guarantee the proper function of our products, the following criteria must be adhered to (non-observance can lead to expiration of this guarantee):

1. After receipt of order, the goods must be kept from moisture, erosion and thermal shock.
2. Ball valves are being delivered in open position. Store in a dry and clean place. Do not remove protective dust caps until final installation.
3. Pipe systems must be flushed before installing ball valves (dirt and other residues can damage seals).
4. It is possible to change the switching direction from our standard „clockwise“ to „counter clockwise“ by reversing the stop disc (see illustration).
5. When mounting pipes or fittings to the ball valve, the valve connectors must be held in place at the hexagon with a suitable tool (open end wrench) to prevent expanding the end connectors.
6. Pressure test max. with 1,1 x PN with closed ball valve; 1,5 x PN in half opened position.

Flanged ball valves and ball valves in larger nominal diameters must be carefully aligned with pipe to prevent line stress. When welding ball valves into the pipe system, the temperature at the body must not exceed +200°C / +392°C.

When bleeding a pipe system, the ball valve must be opened 45° to assure complete drainage.

In case of a defect please contact the factory prior to disassembly of our ball valves.

Sealing Variations

Multi-Way Ball Valves

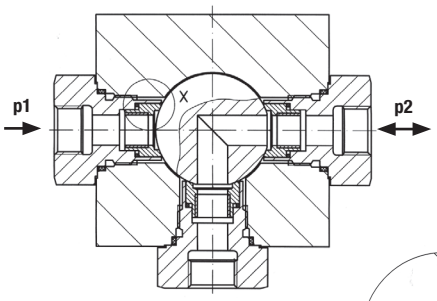

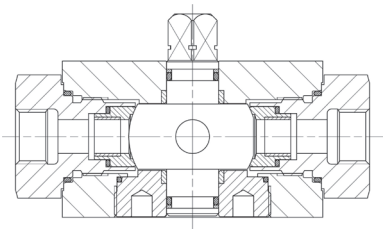

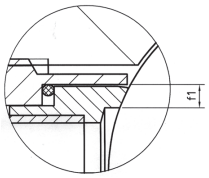

X3:1

This valve has a trunnion ball.

The sealing element seals from the upsteam side. The sealing is guaranteed under all pressure conditions. It is achieved by the sealing element being forced against the ball.

Two-Way Ball Valves (Type LBV)

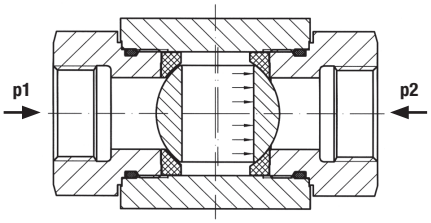

This valve has a floating ball.

The ball seats act as bearing seats for the ball. Sealing is achieved by the ball being pushed against the downstream seal due to the pressure p1 at .

Without pressure the sealing is guaranteed by the preloading of the sealing elements.

G

Three-Way Ball Valves (Type CBVL)

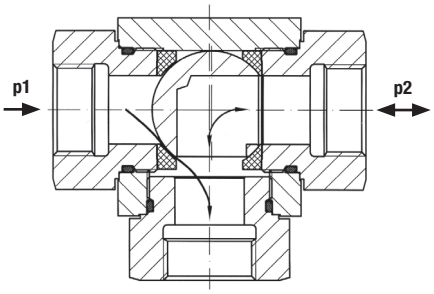

The selector ball valve has 2 seats and a floating ball.

If the shut-off port is pressurised and p1 is higher than p2, then the ball is being forced against the opposite sealing element.

A gap forms and the ball valve is leaking.

Three-Way Ball Valves (Type CBVSL)

The selector ball valve has 2 front side sealing seats and a floating ball.

p1 > p2

Due to the forming of the ring surface „f1“ and the pressure (p1-p2) the left sealing element will be forced against the ball and consequently the sealing is achieved. The „floating“ ball moves against the right sealing surface - the ball valve remains sealed.

Pressure inlet possible from all ports!
Must be operated without pressure!

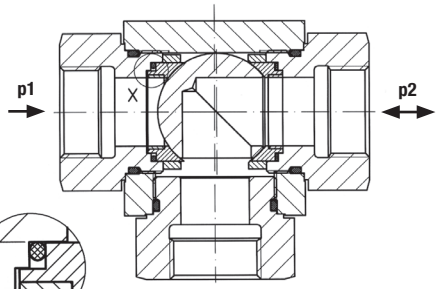

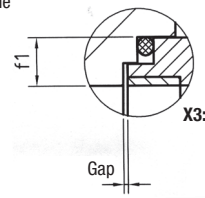

X3:1

p1 < p2

Due to the ring surface „f2“ and the pressure (p2-p1) the right sealing element will also be forced against the ball and consequently the sealing is achieved. The „floating“ ball moves against the left sealing surface - the ball valve remains sealed.

Pressure inlet possible from all ports!
Must be operated without pressure!

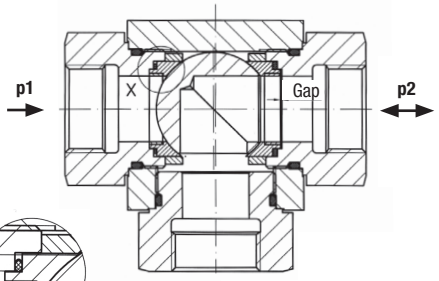

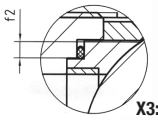

X3:1

Special Protected Seats

For compressible and abrasive media special protected seats are utilised.

During the first part opening of the ball valve, standard plastic seats are located unprotected in the critical cross sectional area.

During gas applications and with all kinds of compressive media this narrowest cross section can result in a very high flow rate that cause erosion of the seats.

If media contain solids, for example paint, the abrasion risk in the first opening section is extremely high.

Ball valves with standard seats can quickly become inoperative.

For this application, STAUFF has designed a sealing version with erosion protection ring. This ring is made of special material and keeps the high flow forces and the abrasive solids away from the plastic seals.

Tests and long term experience with this application have shown that ball valves with this sealing system provide substantially improved life times.

Times of non-use as well as maintenance and repair times are therefore reduced.

A further increase of the lifetime is possible by using metal seating elements.

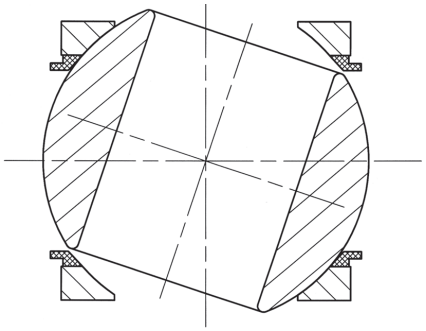

The ring is made of special material and protects the seats against erosion.

G

G

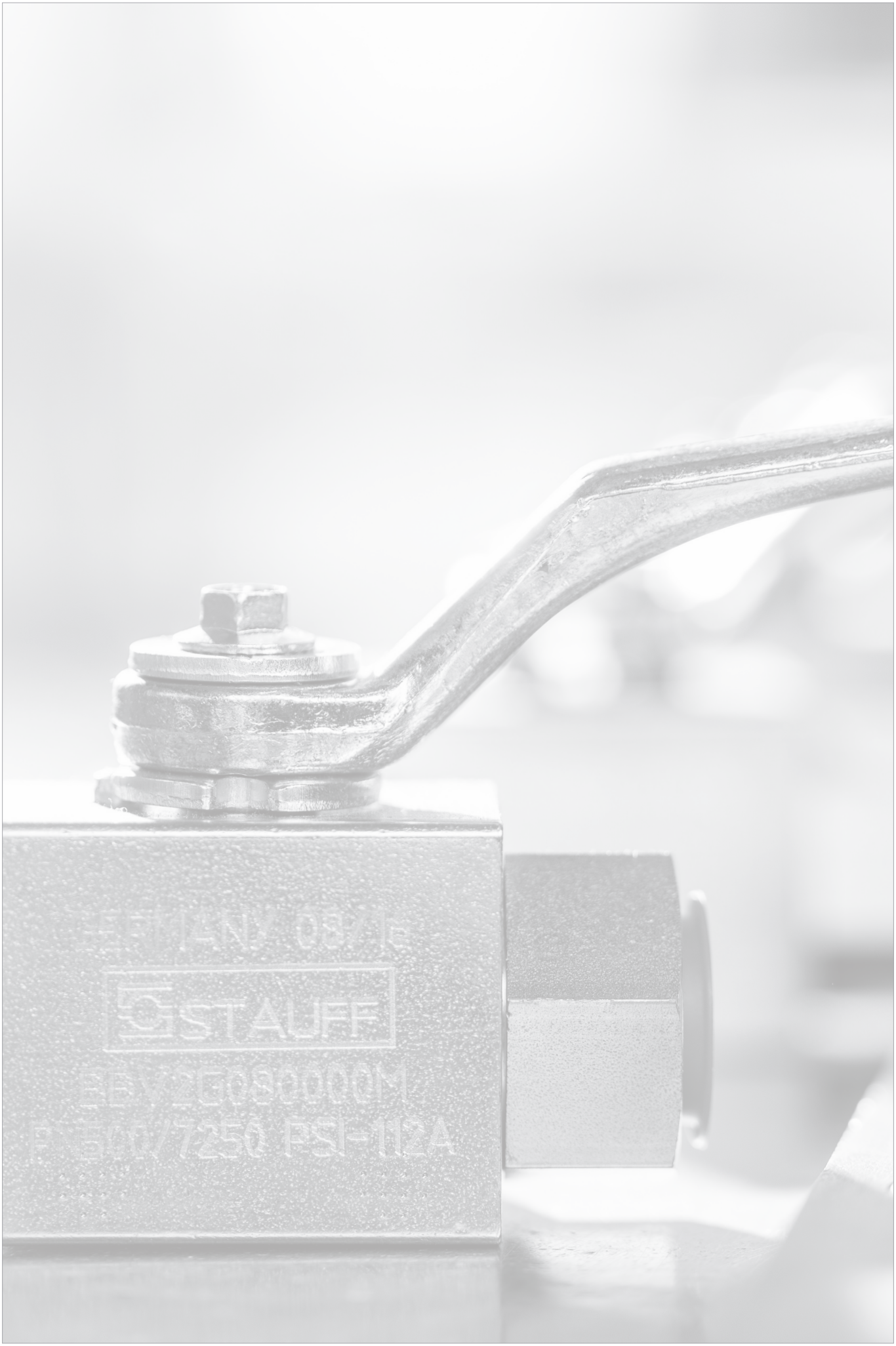

Product-Specific Abbreviations 136

Global Contact Directory 138

Product-Specific Abbreviations

Abbreviation	Product Category	Product Description	Page
AD	Spare Parts / Accessories / Options	Double-Acting Pneumatic Actuators	118
AE	Spare Parts / Accessories / Options	Electric Actuators	118
AS	Spare Parts / Accessories / Options	Single-Acting Pneumatic Actuators	118
BBV-2-C3	Two-Way Ball Valves	High-Pressure Block Body Ball Valve with SAE Flange Connections 3000 PSI Series (ISO 6162-1)	33
BBV-2-C6	Two-Way Ball Valves	High-Pressure Block Body Ball Valve with SAE Flange Connections 6000 PSI Series (ISO 6162-2)	33
BBV-2-F/C3	Two-Way Ball Valves	High-Pressure Block Body Ball Valve with SAE Split / Mating Flange Connections 3000 PSI Series (ISO 6162-1)	29
BBV-2-F/C6	Two-Way Ball Valves	High-Pressure Block Body Ball Valve with SAE Split / Mating Flange Connections 6000 PSI Series (ISO 6162-2)	29
BBV-2-F3	Two-Way Ball Valves	High-Pressure Block Body Ball Valve with SAE Split Flange Connections 3000 PSI Series (ISO 6162-1)	25
BBV-2-F6	Two-Way Ball Valves	High-Pressure Block Body Ball Valve with SAE Split Flange Connections 6000 PSI Series (ISO 6162-2)	25
BBV-2-G	Two-Way Ball Valves	High-Pressure Block Body Ball Valve with Female BSP Threads	15
BBV-2-L/S	Two-Way Ball Valves	High-Pressure Block Body Ball Valve with 24° Cone Connections	17
BBV-2-N	Two-Way Ball Valves	High-Pressure Block Body Ball Valve with Female NPT Thread	15
BBV-2-ORFS	Two-Way Ball Valves	High-Pressure Block Body Ball Valve with O-Ring Face Seal Connections	16
BBV-2-U	Two-Way Ball Valves	High-Pressure Block Body Ball Valve with Female UN/UNF Thread	16
BV-2-C3	Two-Way Ball Valves	High-Pressure Round Body Ball Valve with SAE Flange Connections 3000 PSI Series (ISO 6162-1) - Single Pattern	39
BV-2-C3/6	Two-Way Ball Valves	High-Pressure Round Body Ball Valve SAE Flange Connections 3000/6000 PSI Series (ISO 6162-1/2) - Dual Pattern	37
BV-2-C6	Two-Way Ball Valves	High-Pressure Round Body Ball Valve with SAE Flange Connections 6000 PSI Series (ISO 6162-2) - Single Pattern	39
BV-2-CET2	Two-Way Ball Valves	High-Pressure Round Body Ball Valve with CETOP Flange Connections 250 bar / 3600 PSI Series (CETOP RP 63 H)	43
BV-2-CET4	Two-Way Ball Valves	High-Pressure Round Body Ball Valve with CETOP Flange Connections 400 bar / 5800 PSI Series (CETOP RP 63 H)	43
BV-2-ISO2	Two-Way Ball Valves	High-Pressure Round Body Ball Valve with ISO Flange Connections 250 bar / 3600 PSI Series (ISO 6164)	41
BV-2-ISO3	Two-Way Ball Valves	High-Pressure Round Body Ball Valve with ISO Flange Connections 350 bar / 5000 PSI Series (not part of ISO 6164)	41
BV-2-ISO4	Two-Way Ball Valves	High-Pressure Round Body Ball Valve with ISO Flange Connections 400 bar / 5800 PSI Series (ISO 6164)	41
CBVL-3-C	Multi-Way Ball Valves	High-Pressure Block Body Ball Valve with SAE Flange Connection 6000 PSI Series (ISO 6162-2)	65
CBVL-3-G	Multi-Way Ball Valves	High-Pressure Block Body Ball Valve with Female BSP Threads - L-Bore Three-Way Selector	57
CBVL-3-L/S	Multi-Way Ball Valves	High-Pressure Block Body Ball Valve with 24° Cone Connections - L-Bore Three-Way Selector	59
CBVL-3-N	Multi-Way Ball Valves	High-Pressure Block Body Ball Valve with Female NPT Threads - L-Bore Three-Way Selector	57
CBVL-3-U	Multi-Way Ball Valves	High-Pressure Block Body Ball Valve with Female UN/UNF Threads - L-Bore Three-Way Selector	58
CBVSL-3-G	Multi-Way Ball Valves	High-Pressure Block Body Ball Valve with Female BSP Threads - L-Bore Three-Way Selector	67
CBVSL-3-L/S	Multi-Way Ball Valves	High-Pressure Block Body Ball Valve with 24° Cone Connections - L-Bore Three-Way Selector	69
CBVSL-3-N	Multi-Way Ball Valves	High-Pressure Block Body Ball Valve with Female NPT Threads - L-Bore Three-Way Selector	67
CBVSL-3-U	Multi-Way Ball Valves	High-Pressure Block Body Ball Valve with Female UN/UNF Threads - L-Bore Three-Way Selector	68
CBVST-3-G	Multi-Way Ball Valves	High-Pressure Block Body Ball Valve with Female BSP Threads - T-Bore Three-Way Selector	71
CBVST-3-L/S	Multi-Way Ball Valves	High-Pressure Block Body Ball Valve with 24° Cone Connections - T-Bore Three-Way Selector	73
CBVST-3-N	Multi-Way Ball Valves	High-Pressure Block Body Ball Valve with Female NPT Threads - T-Bore Three-Way Selector	71
CBVST-3-U	Multi-Way Ball Valves	High-Pressure Block Body Ball Valve with Female UN/UNF Threads - T-Bore Three-Way Selector	72
CBVT-3-G	Multi-Way Ball Valves	High-Pressure Block Body Ball Valve with Female BSP Threads - T-Bore Three-Way Selector	61
CBVT-3-L/S	Multi-Way Ball Valves	High-Pressure Block Body Ball Valve with 24° Cone Connections - T-Bore Three-Way Selector	63
CBVT-3-N	Multi-Way Ball Valves	High-Pressure Block Body Ball Valve with Female NPT Threads - T-Bore Three-Way Selector	61
CBVT-3-U	Multi-Way Ball Valves	High-Pressure Block Body Ball Valve with Female UN/UNF Threads - T-Bore Three-Way Selector	62
DRV	Flow Control Valves	Flow Control Valve (In-Line Assembly)	93
DRVP	Flow Control Valves	Flow Control Valve (Manifold Assembly)	95
DV	Flow Control Valves	Throttle and Shut-Off Valve (In-Line Assembly)	92
DVE	Flow Control Valves	Throttle and Shut-Off Valve (Cartridge Assembly)	96
DVP	Flow Control Valves	Throttle and Shut-Off Valve (Manifold Assembly)	94
FBV-2-C3	Two-Way Ball Valves	High-Pressure Forged Body Ball Valve with SAE Flange Connections 3000 PSI Series (ISO 6162-1)	35
FBV-2-C6	Two-Way Ball Valves	High-Pressure Forged Body Ball Valve with SAE Flange Connections 6000 PSI Series (ISO 6162-2)	35
FBV-2-F/C3	Two-Way Ball Valves	High-Pressure Forged Body Ball Valve with SAE Split / Mating Flange Connections 3000 PSI Series (ISO 6162-1)	31
FBV-2-F/C6	Two-Way Ball Valves	High-Pressure Forged Body Ball Valve with SAE Split / Mating Flange Connections 6000 PSI Series (ISO 6162-2)	31
FBV-2-F3	Two-Way Ball Valves	High-Pressure Forged Body Ball Valve with SAE Split Flange Connections 3000 PSI Series (ISO 6162-1)	27
FBV-2-F6	Two-Way Ball Valves	High-Pressure Forged Body Ball Valve with SAE Split Flange Connections 6000 PSI Series (ISO 6162-2)	27
FBV-2-G	Two-Way Ball Valves	High-Pressure Forged Body Ball Valve with Female BSP Threads	19
FBV-2-L/S	Two-Way Ball Valves	High-Pressure Forged Body Ball Valve with 24° Cone Connections	21
FBV-2-N	Two-Way Ball Valves	High-Pressure Forged Body Ball Valve with Female NPT Thread	19
FBV-2-ORFS	Two-Way Ball Valves	High-Pressure Forged Body Ball Valve with O-Ring Face Seal Connections	20
FBV-2-U	Two-Way Ball Valves	High-Pressure Forged Body Ball Valve with Female UN/UNF Thread	20
HBV-2-N	Two-Way Ball Valves	High-Pressure 800 bar / 12000 PSI Block Body Ball Valve with Female BSP Thread	23
HBV-2-S	Two-Way Ball Valves	High-Pressure 800 bar / 12000 PSI Block Body Ball Valve with 24° Cone Connections	23
KHZ-2-C3	Two-Way Ball Valves	High-Pressure Block Body Ball Valve with SAE Flange Connections 3000 PSI Series (ISO 6162-1)	45
KHZ-2-C6	Two-Way Ball Valves	High-Pressure Block Body Ball Valve with SAE Flange Connections 6000 PSI Series (ISO 6162-2)	46
LBV-3-G	Multi-Way Ball Valves	High-Pressure Block Body Ball Valve with Female BSP Threads - L-Bore Three-Way Selector	75
LBV-3-L/S	Multi-Way Ball Valves	High-Pressure Block Body Ball Valve with 24° Cone Connections - L-Bore Three-Way Selector	77
LBV-3-N	Multi-Way Ball Valves	High-Pressure Block Body Ball Valve with Female NPT Threads - L-Bore Three-Way Selector	75
LBV-3-U	Multi-Way Ball Valves	High-Pressure Block Body Ball Valve with Female UN/UNF Threads - L-Bore Three-Way Selector	76
LD	Spare Parts / Accessories / Options	Locking Devices	115

Product-Specific Abbreviations

Abbreviation	Product Category	Product Description	Page
MBBV-2	Two-Way Ball Valves	High-Pressure Block Body Ball Valve for Manifold Mounting	**48**
MCBVL-3	Multi-Way Ball Valves	High-Pressure Block Body Ball Valve for Manifold Mounting	**52**
MCBVSL-3	Multi-Way Ball Valves	High-Pressure Block Body Ball Valve for Manifold Mounting	**54**
PNDRV	Flow Control Valves	Pressure Compensated Flow Control Valve (In-Line Assembly)	**97**
RV	Flow Control Valves	Heavy-Duty Check Valve (In-Line Assembly)	**98**
RVM	Flow Control Valves	Medium-Duty Check Valve (In-Line Assembly)	**99**
SWS-A1	Gauge Isolator Valves	Gauge Isolator Needle Valve (Single Station)	**105**
SWS-A2	Gauge Isolator Valves	Gauge Isolator Needle Valve (Single Station)	**105**
SWS-M	Gauge Isolator Valves	Gauge Isolator Valve (Multi Station)	**104**
SWS-S1	Gauge Isolator Valves	Gauge Isolator Valve (Single Station)	**104**
TBV-3-G	Multi-Way Ball Valves	High-Pressure Block Body Ball Valve with Female BSP Threads - T-Bore Three-Way Selector	**79**
TBV-3-L/S	Multi-Way Ball Valves	High-Pressure Block Body Ball Valve with 24° Cone Connections - T-Bore Three-Way Selector	**81**
TBV-3-N	Multi-Way Ball Valves	High-Pressure Block Body Ball Valve with Female NPT Threads - T-Bore Three-Way Selector	**79**
TBV-3-U	Multi-Way Ball Valves	High-Pressure Block Body Ball Valve with Female UN/UNF Threads - T-Bore Three-Way Selector	**80**
TBV-4-G	Multi-Way Ball Valves	High-Pressure Block Body Ball Valve with Female BSP Threads - T-Bore Four-Four Selector	**83**
TBV-4-L/S	Multi-Way Ball Valves	High-Pressure Block Body Ball Valve with 24° Cone Connections - T-Bore Four-Four Selector	**85**
TBV-4-N	Multi-Way Ball Valves	High-Pressure Block Body Ball Valve with Female NPT Threads - T-Bore Four-Four Selector	**83**
TBV-4-U	Multi-Way Ball Valves	High-Pressure Block Body Ball Valve with Female UN/UNF Threads - T-Bore Four-Four Selector	**84**
XBV-4-G	Multi-Way Ball Valves	High-Pressure Block Body Ball Valve with Female BSP Threads - Double L-Bore Four-Way Selector	**87**
XBV-4-L/S	Multi-Way Ball Valves	High-Pressure Block Body Ball Valve with 24° Cone Connections - Double L-Bore Four-Way Selector	**99**
XBV-4-N	Multi-Way Ball Valves	High-Pressure Block Body Ball Valve with Female NPT Threads - Double L-Bore Four-Way Selector	**87**
XBV-4-U	Multi-Way Ball Valves	High-Pressure Block Body Ball Valve with Female UN/UNF Threads - Double L-Bore Four-Way Selector	**88**

Global Contact Directory

STAUFF products and services are globally available through wholly-owned subsidiaries and a tight network of authorised distributors and representatives in all major industrial regions of the world.

Contact information on this page may be subject to changes and additions over time. Frequently updated and complete contact information can always be found at www.stauff.com.

Germany

Walter Stauffenberg GmbH & Co. KG
Im Ehrenfeld 4
58791 Werdohl
www.stauff.com/contact

www.stauff.com

Neuenrade-Küntrop Logistics Centre
Wasserburgstraße 35
58809 Neuenrade

Plettenberg-Ohle Production Site
Lennestraße 2
58840 Plettenberg

Meinerzhagen Production Site
Neugrünenthal
58540 Meinerzhagen

Meinerzhagen Production Site
Am Rottland 7
58540 Meinerzhagen

STAUFF Digital
Phoenixplatz 3
44263 Dortmund

Europe

France

STAUFF S.A.S.
230, Avenue du Grain d'Or
Z.I. de Vineuil - Blois Sud
41354 Vineuil-cedex
Tel.: +33 2 54 50 55 50
Fax: +33 2 54 42 29 19
E-Mail: direction@stauffsa.com
www.stauff.fr

Ireland

STAUFF UK Ltd.
Block B, 9 Ferguson Drive
Knockmore Hill Industrial Estate
Lisburn, County Antrim, BT28 2EX
Tel.: +44 2892 60 69 00
Fax: +44 2892 60 26 88
E-Mail: sales@stauffireland.com
www.stauff.co.uk

Italy

STAUFF Italia s.r.l
Via Borima 21 (Frazione Borima)
23867 Suello (LC)

Tel.: +39 031 65 84 94
Fax: +39 031 65 50 05
E-Mail: sales@stauff.it
www.stauff.it

Poland

STAUFF Polska Sp. z o.o.
Miszewko 43 A
80-297 Banino

Tel.: +48 58 660 11 60
Fax: +48 58 629 79 52
E-Mail: sales@stauff.pl
www.stauff.pl

Russian Federation

STAUFF LLC
Building 1
19, Leninskaya Sloboda
Moscow, 115280
Tel.: +7 495 276 16 50
Fax: +7 495 276 16 51
E-Mail: sales@stauff.ru
www.stauff.ru

Further branch offices in
Engels, Volzhskiy, Magnitogorsk,
Nizhny Novgorod and St. Petersburg.

United Kingdon

STAUFF UK Ltd.
500, Carlisle Street East
Off Downgate Drive
Sheffield, S4 8BS
Tel.: +44 114 251 85 18
Fax: +44 114 251 85 19
E-Mail: sales@stauff.co.uk
www.stauff.co.uk

STAUFF UK Ltd.
Badentoy Avenue
Badentoy Industrial Estate
Portlethen, Aberdeen, AB12 4YB
Tel.: +44 1224 78 61 66
Fax: +44 1224 78 61 77
E-Mail: sales@stauffscotland.co.uk
www.stauff.co.uk

Global Contact Directory

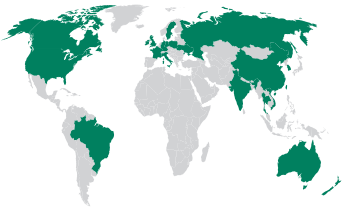

North America

Canada

STAUFF Canada Ltd.
866 Milner Avenue
Scarborough
Ontario M1B 5N7
Tel.: +1 416 282 46 08
Fax: +1 416 282 30 39
E-Mail: sales@stauffcanada.com
www.stauffcanada.com

United States

STAUFF Corporation
7 Wm. Demarest Place
Waldwick, 07463-1542
New Jersey
Tel.: +1 201 444 78 00
Fax: +1 201 444 78 52
E-Mail: sales@stauffusa.com
www.stauffusa.com

Further branch office in
Canton, Michigan.

South America

Brazil

STAUFF Brasil Ltda.
Avenida Gupê 10767
Galpão 2 - Bloco A
Barueri, São Paulo, CEP 06422-120
Tel.: +55 11 47 72 72 00
Fax: +55 11 47 72 72 10
E-Mail: stauff@stauffbrasil.com
www.stauffbrasil.com

Asia

China

STAUFF CHINA
Building 8, No. 1698, Minyi Road
Songjiang District,
Shanghai, 201612
Tel.: +86 21 68 18 70 00
Fax: +86 21 68 18 71 36
E-Mail: info@stauff.com.cn
www.stauff.com.cn

Further branch offices in Beijing, Changsha, Chengdu, Changchun, Chongqing, Jinan, Harbin, Guangzhou, Shenyang, Wuhan, Xian and Xuzhou.

India

STAUFF India Pvt. Ltd.
Gat no. 26/1 & 27, Sanghar Warehousing
Pune - Nagar Road
Lonikand - 412216
Tel.: +91 20 6731 4900
Fax: +91 20 6731 4905
E-Mail: sales@stauffindia.com
www.stauffindia.com

Korea

STAUFF Korea Ltd.
105, Hwajeonsandan 5-ro
Gangseo-gu
Busan, 46739
Tel.: +82 51 266 6666
Fax: +82 51 266 8866
E-Mail: info@stauff.co.kr
www.stauff.co.kr

Singapore

STAUFF (SEA) Pte. Ltd.
128 Joo Seng Road #02-01
Singapore 368356
Tel.: +65 62 44 61 68
E-Mail: sales_sg@stauff.com
www.stauff.com.sg

Thailand

STAUFF (Thailand) Co., Ltd.
10 Soi On-Nut 74/4
Pravet District
Bangkok 10250
Tel.: +66 2 721 73 23 / 24
Fax: +66 2 721 73 35
E-Mail: sales@stauff.co.th
www.stauff.co.th

Vietnam

STAUFF Vietnam Ltd.
8th Floor, Qunimex Building
28 Nguyen Thi Dieu
District 3, Ho Chi Minh City
Tel.: +84 8 3948 10 41 / 42
Fax: +84 8 3948 10 44
E-Mail: sales@stauff.com.vn
www.stauff.com.vn

Oceania

Australia

STAUFF Corporation Pty Ltd
24-26 Doyle Avenue
Unanderra NSW 2526

Tel.: +61 2 4271 9000
Fax: +61 2 4271 8432
E-Mail: sales@stauff.com.au
www.stauff.com.au

Further branch offices in
Adelaide, Brisbane, Melbourne
and Sydney.

New Zealand

STAUFF Corporation (NZ) Ltd.
Unit D, 103 Harris Road
East Tamaki, Auckland 2013

Tel.: +64 9 912 1530
Fax: +64 9 912 1531
E-Mail: sales@stauff.co.nz
www.stauff.co.nz

Introduction

Two-Way Ball Valves

Multi-Way Ball Valves

Flow Control Valves

Gauge Isolator Valves

Special Application Valves

Spare Parts / Accessories / Options

Technical Appendix

Appendix

Catalogue 6

STAUFF Valves

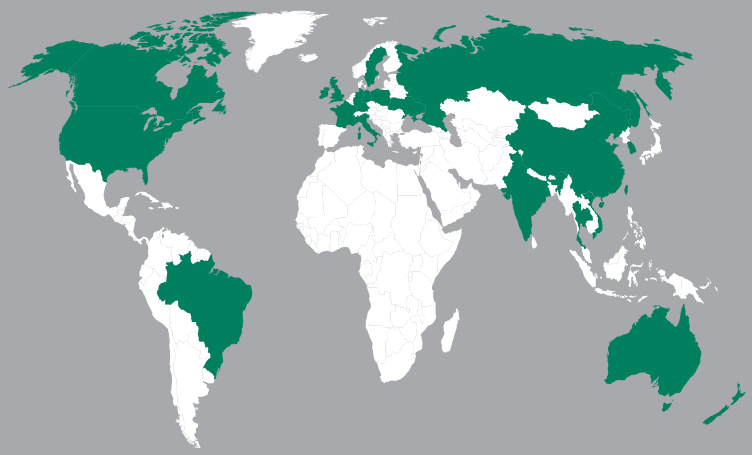

Germany

Walter Stauffenberg GmbH & Co. KG
Im Ehrenfeld 4
58791 Werdohl

STAUFF products and services are globally available through wholly-owned subsidiaries and a tight network of authorised distributors and representatives in all major industrial regions of the world.

Contact STAUFF:

www.stauff.com/contact

Catalogue 6 STAUFF Valves ▪ English ▪ 9910000426 ▪ 06/2024